HAZARDOUS LOCATIONS LED LUMINAIRE
EX-B Spec Sheet

Pan American
Professional Lighting Manufacturer



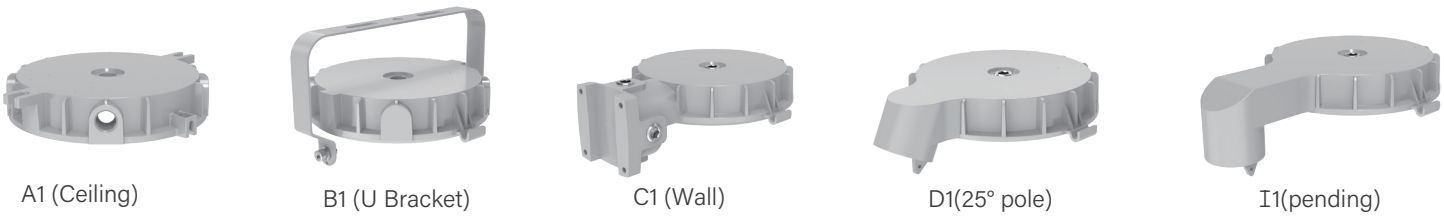

A1 (Ceiling) B1 (U Bracket) C1 (Wall) D1(25° pole) I1(pending)

EX-B Spec Sheet

The B2/B5/BX/B4 Series LED luminaire is the ideal choice for hazardous applications. They can be used in locations wheremo-isture, dirt, dust, corrosion and vibration may be present, or areas where wind, water, snow or high ambient can be expected. Featuring various shapes of driver box cover, this series is designed to meet different requirements of installations.

Compliance

- UL 844 Hazardous Locations Class
  Class I Division 2, Groups A, B, C and D
  Class II Division 1, Groups E, F and G
  Class II Division 2, Groups F and G
  Class III
- UL 1598 Wet Locations
- UL 1598A Marine Outside Type
- DNV
- ABS
- Vibration 3G
- NEMA Type 4X
- IP66
- IK08 (without wire guard)
- IK10 (with wire guard)

Application

- Power Plants
- Heavy Industrials Storage Facility
- Paper mills
- Wastewater Treatment Plants
- Loading Docks Platforms
- Offshore Environments
- Chemical Processing Facility
- Petrochemical Processing Facility
- Metallurgical industry
- Food and Alcohol industry

HAZARDOUS LOCATIONS LED LUMINAIRE
EX-B Spec Sheet

Pan American
Professional Lighting Manufacturer

Benefits & Features

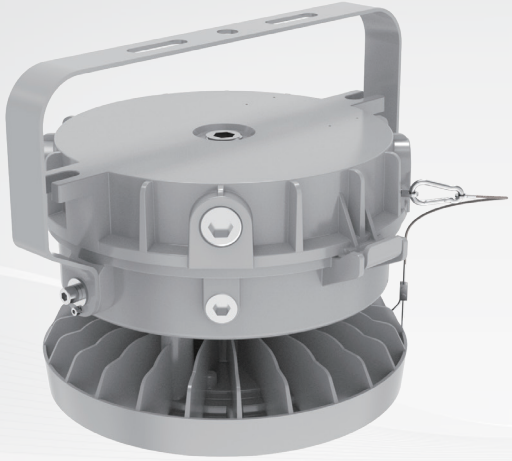

- Emergency function is optional
- Compact and rugged structure, easy for installation
- Various kinds of driver box cover available, designed for different installation requirements
- Shock and vibration resistance with IK08/IK10 certified
- High luminous efficacy - Up to 165 lumens per watt
- Aluminum housing, great corrosion resistance and cooling performance

Key Features and Information

• Electrical

Model	EX-xxxW B2	EX-xxxW B5	EX-xxxW BX	EX-xxxW B4
Selectable Power	40W/60W/80W	60W/80W/100W	120W/150W/200W	200W/250W/300W
NO-Selectable Power	/			350W/400W/500W/550W
Power Model	B2: FD-100T-054D for 120-347VAC; VA-100V-054B for 277-480VAC; B5: SS-100VA-56BHL for 120-277VAC; VA-100V-054B for 277-480VAC; BX: XLG-240-H-ABL for 120-277VAC; ESM-240S670MG for 277-480VAC; B4: ELGC-300-H-AB/SS-500VP/SS-600VP-56BH for 120-277VAC;HVG-480-48AB/HVG-650-48AB for 277-480VAC			
Input Voltage	120-277/347VAC or 277-480VAC			
Input Frequency	50/60Hz			
Power Factor @120V	> 0.95			
Optional Emergency Function	Min. 90 mins (Contact sales for EM options)			
Service Life	Up to 50,000 hours			
Salt Spray	500Hours			
Dimming	Driver includes dimming control wiring for 1-10V dimming systems. Requires separate 1-10V DC dimming circuit.			



HAZARDOUS LOCATIONS LED LUMINAIRE
EX-B Spec Sheet

Pan American
Professional Lighting Manufacturer

• Optical

Model	EX-xxxW B2	EX-xxxW B5	EX-xxxW BX	EX-xxxW B4
Selectable Power	40W/60W/80W	60W/80W/100W	120W/150W/200W	200W/250W/300W
Lumens Per Watt	160lm/W	160lm/W	160lm/W	165lm/W
Lumen Output	6400–12800lm	9600–16000lm	19200–32000lm	33000–49500lm
Selectable CCT	4000K/5000K/6500K			
CRI	＞70			
Beam Angle	120°			
LED	Long-life, high-efficacy, discrete, surface-mount 2835 LEDs 100,000-Hour LED lifespan based on IES LM-80 results and TM-21			



(Note: Refer to the table of testing data on page 4-6.)

• Mechanical

Model	EX-xxxW B2/B5/BX/B4
Housing Material	Die-cast Aluminum
Lens Material	Clear Flat Glass
Gasket Material	Silicone Rubber
Hardware	Stainless steel 304
Protection Rating	Ingress protection: IP66 Impact protection: IK08; IK10 (with wire guard)
Mounting Options	Ceiling Mount (Included), Surface Mount (Included)
Cable Entries	3/4"NPT
Warranty	5-year limited warranty for fixture ; 3-year limited warranty for battery backup

• Temperature Class

Model	Input Voltage	Power Model	Temperature Class
B2	120-347VAC	FD-100T-054D	T4A: -40℃ to +55℃ (CIDII)
	277-480VAC	VA-100V-054B	
B5	120-277VAC	SS-100VA-56BHL	T5:-40℃ to +60℃ (CIDII)
	277-480VAC	VA-100V-054B	T5:-40℃ to +55℃ (CIDII)
BX	120-277VAC	XLG-240-H-ABL	T4A:-40℃ to +50℃ (CIDII)
	277-480VAC	ESM-240S670MG	

HAZARDOUS LOCATIONS LED LUMINAIRE
EX-B Spec Sheet

Pan American
Professional Lighting Manufacturer

Model	Input Voltage	Power Model	Temperature Class
B4 300W	120-277VAC	ELGC-300-H-AB	T5: -40℃ to +55℃ (CIDII)
	277-480VAC	HVG-480-48AB	
B4 350W	120-277VAC	SS-500VP(Single Power)	T5: -40℃ to +55℃ (CIDII)
	277-480VAC	HVG-480-48AB (Single Power)	
B4 400W	120-277VAC	SS-600VP-56BH(Single Power)	T4A:-40℃ to +55℃ (CIDII)
	277-480VAC	HVG-650-48AB (Single Power)	T4A: -40℃ to +50℃ (CIDII)
B4 500W	120-277VAC	SS-600VP-56BH(Single Power)	T4A: -40℃ to +50℃ (CIDII)
	277-480VAC	HVG-650-48AB(Single Power)	
B4 550W	120-277VAC	SS-600VP-56BH(Single Power)	T4A: -40℃ to +40℃ (CIDII)
	277-480VAC	HVG-650-48AB(Single Power)	

- Electrical specification (actual measurement)

Model	EX-80WB2D50D120PMT10T								
Test Power	80W			60W			40W		
Test CCT (K)	6500	5000	4000	6500	5000	4000	6500	5000	4000
Lumens Per Watt (lm/W)	158.25	165.66	158.47	160.64	166.97	161.88	161.71	166.16	162.91
Lumen Output (lm)	12391	12566	12295	9486.2	9675.2	9684.2	6530.6	6601.8	6588.3
Beam Angle	110	109.7	109.6	109.9	109.7	109.5	109.9	109.7	109.4
CCT (K)	6257	4994	4082	6199	4986	4078	6175	4986	4071
CRI	72.9	73.7	73	73	73.6	73	73.1	73.7	73.1
Power Factor	0.9979	0.9982	0.9982	0.9972	0.997	0.9972	0.9935	0.9933	0.9934
Test Voltage	120VAC								
Test Power Model	FD-100T-054D								

HAZARDOUS LOCATIONS LED LUMINAIRE
EX-B Spec Sheet

Pan American
Professional Lighting Manufacturer

Model	EX-100WB5D50D120V10T								
Test Power	100W			80W			60W		
Test CCT (K)	6500	5000	4000	6500	5000	4000	6500	5000	4000
Lumens Per Watt (lm/W)	157.28	167.26	158.06	161.82	170.13	161.68	164.67	171.24	165.22
Lumen Output (lm)	16036	16518	16157	13056	13352	13038	9954.7	10120	9992.8
Beam Angle	109.6	109.4	109.1	109.7	109.4	109.2	109.5	109.2	109
CCT (K)	6273	4972	4068	6263	4974	4068	6243	4969	4062
CRI	73.2	73.9	73.3	73.3	74	73.3	73.4	74	73.4
Power Factor	0.9977	0.9976	0.9977	0.9965	0.9962	0.9964	0.994	0.9937	0.994
Test Voltage	120VAC								
Test Power Model	SS-100VA-56BHL								

Model	EX-200WBXD50D120X24T								
Test Power	200W			150W			120W		
Test CCT (K)	6500	5000	4000	6500	5000	4000	6500	5000	4000
Lumens Per Watt (lm/W)	159	167.36	158.17	162.87	169.27	162.38	164.55	170.16	164.31
Lumen Output (lm)	31522	32126	31480	24966	25361	25002	20142	20449	20218
Beam Angle	108.5	108.2	107.8	108.6	108.2	107.9	108.8	108.3	107.9
CCT (K)	6260	5026	4100	6243	5028	4092	6214	5028	4089
CRI	73.3	73.6	73	73.4	73.6	73	73.2	73.7	73.1
Power Factor	0.9994	0.9993	0.9994	0.9982	0.998	0.9982	0.9965	0.9965	0.9965
Test Voltage	120VAC								
Test Power Model	XLG-240-H-ABL								

HAZARDOUS LOCATIONS LED LUMINAIRE
EX-B Spec Sheet

Pan American
Professional Lighting Manufacturer

Model	EX-300WB4D50D120EPG30T								
Test Power	300W			250W			200W		
Test CCT (K)	6500	5000	4000	6500	5000	4000	6500	5000	4000
Lumens Per Watt (lm/W)	172.69	178.88	170.86	175.66	181.09	174.18	179.44	183.52	178.16
Lumen Output (lm)	53106	53716	52732	44882	45221	44540	35291	35404	35089
Beam Angle	109.9	109.7	109.6	109.9	109.7	109.6	109.9	109.7	109.6
CCT (K)	6214	5003	4075	6189	5001	4073	6173	5003	4068
CRI	73.2	73.5	73	73	73.5	73.1	73.1	73.5	73.1
Power Factor	0.999	0.9988	0.998	0.9971	0.9968	0.998	0.9963	0.9959	0.9964
Test Voltage	120VAC								
Test Power Model	ELGC-300-H-AB								

Photometric

- 120 Degree

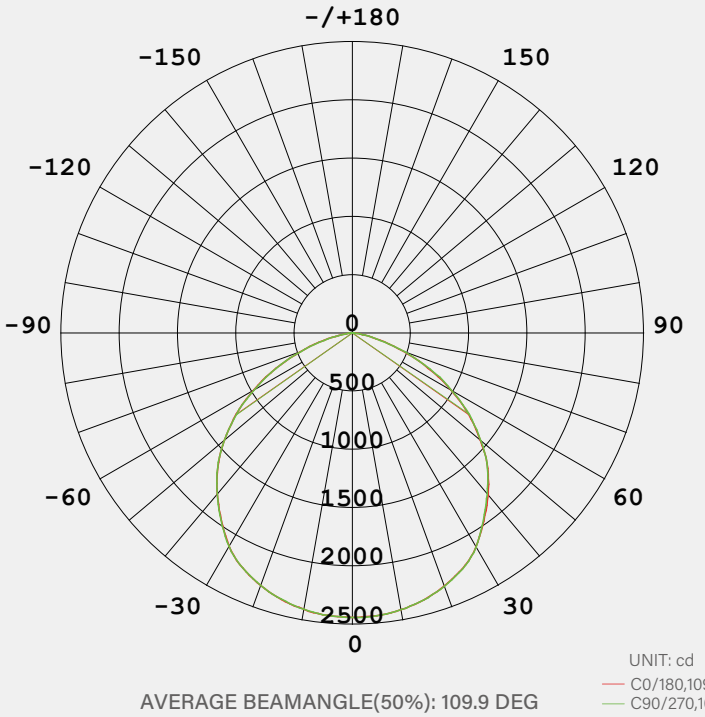

AVERAGE BEAMANGLE(50%): 109.9 DEG

HAZARDOUS LOCATIONS LED LUMINAIRE
EX-B Spec Sheet

Pan American
Professional Lighting Manufacturer

Power and CCT Selectable

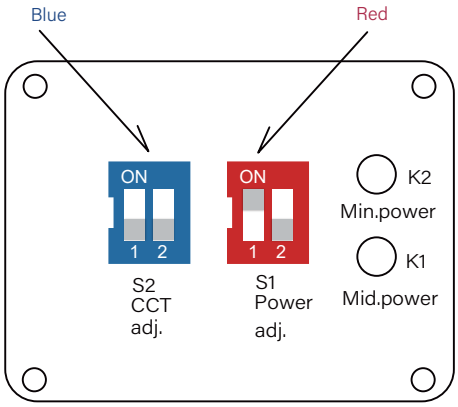

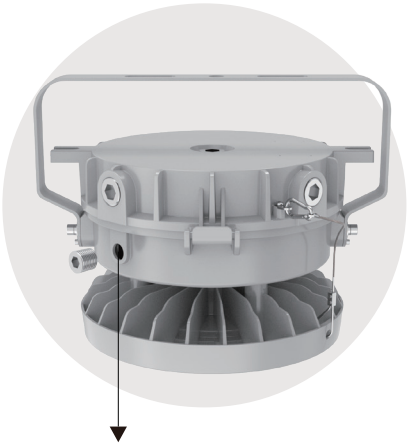

Power and CCT Selectable

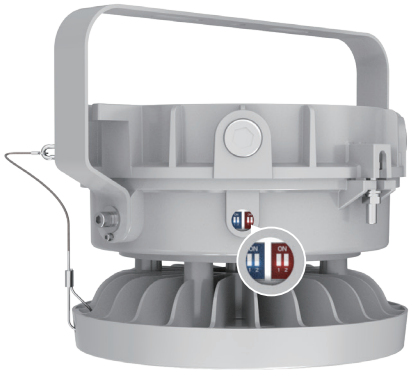

DIP switch

Operating Instructions

- **S1 DIP switch - Red (S1 Power adj.)**

The luminaire incorporates a dual-dial power configuration switch enabling three selectable output ratings. Factory default settings and power levels can be customized based on project requirements.

1. Maximum Output (100% nominal power)
Switch configuration: Dial 1 = OFF, Dial 2 = OFF;



B5: 150W

2. Medium Output (70%-90% of nominal power, depending on specification)Switch configuration: Dial 1 = ON, Dial 2 = OFF



B5: 100W

3. Minimum Output (50%-70% of nominal power, depending on specification)Switch configuration: Dial 1 = OFF, Dial 2 = ON



B5:80W

- **S2 DIP switch - Blue (S2 CCT adj.)**

The luminaire incorporates a dual-dial power configuration switch enabling three preset color temperature options. The factory default setting can be customized according to order requirements.

1. Cool white, e.g. 6500K
Switch configuration: Dial 1 = OFF, Dial 2 = OFF



6500K

2. Neutral white, e.g. 5000K
Switch configuration: Dial 1 = ON, Dial 2 = OFF



5000K

3. Warm white, e.g. 4000K
Switch configuration: Dial 1 = ON, Dial 2 = ON



4000K

HAZARDOUS LOCATIONS LED LUMINAIRE
EX-B Spec Sheet

Pan American
Professional Lighting Manufacturer

Product Dimensions Unit: mm[inch]

- B2

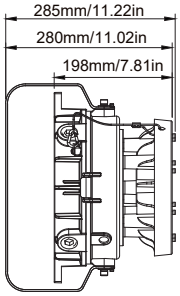

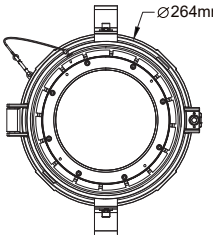

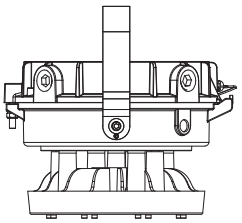

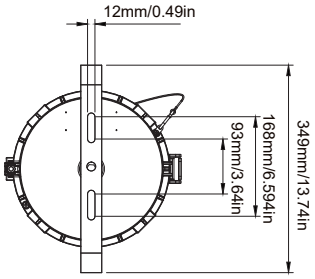

- B5

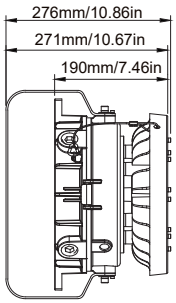

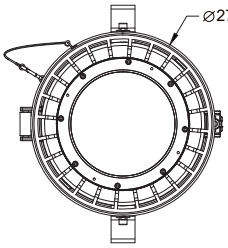

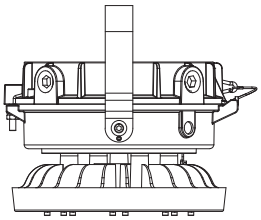

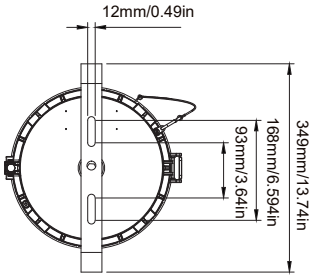

- BX

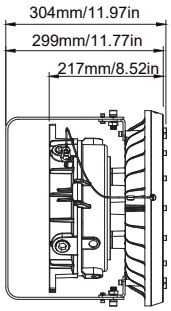

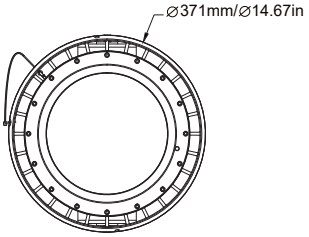

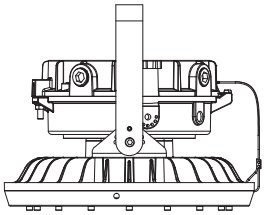

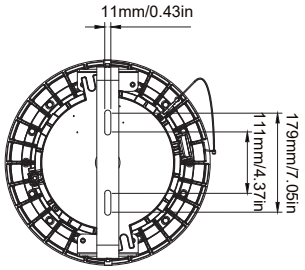

- B4

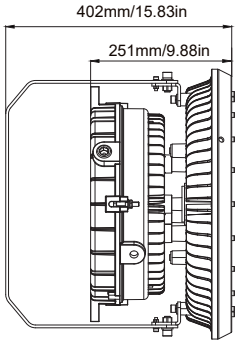

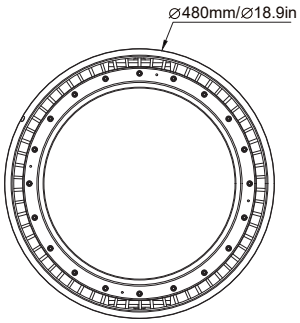

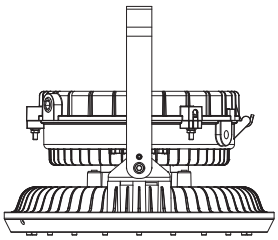

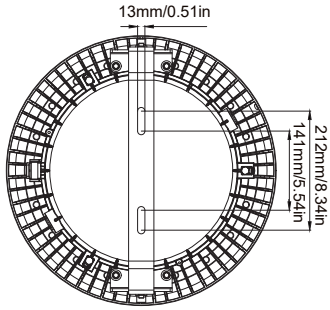

Mounting Methods

- Option 1: Ceiling Mounting

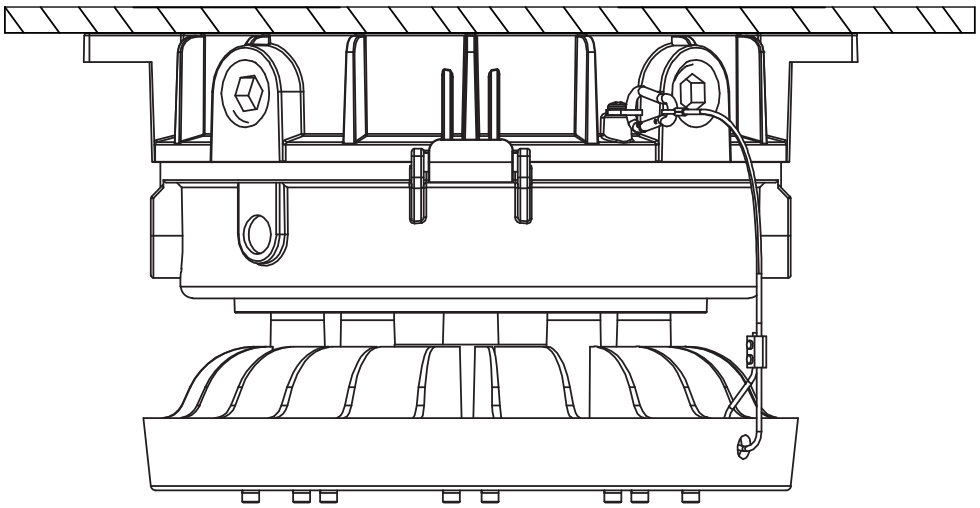

- Option 2: U bracket Mounting

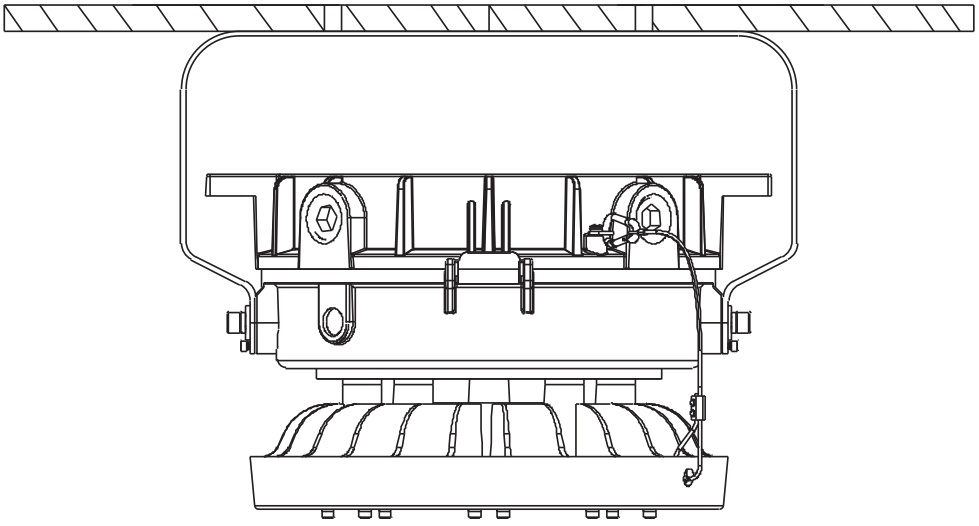

- Option 3: Pendant Mounting

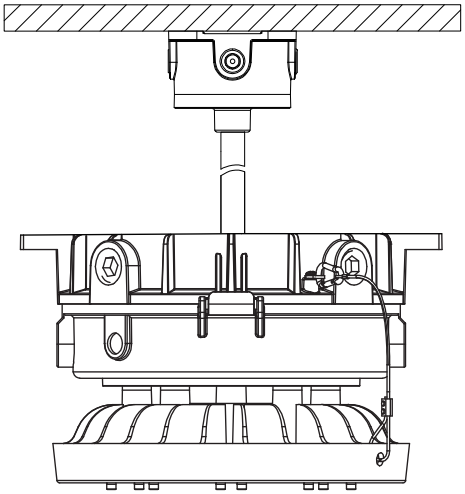

Accessories



EX-Bended Pipe



EX-Straight Pipe



EX-HD51-KYD 90°



EX-HD51-KYD 25°



EX-Slip Fitter Kit



EX-90° Wall Mount Kit



EX-25° Wall Mount Kit



EX-90° Stanchion Mount Kit



EX-25° Stanchion Mount Kit



EX-Hook



EX-HD51-KB1

Packing Information

Model	Package Dimensions（LxWxH）	Net Weight	Gross Weight	Quantity/Carton
B2	450x450x300mm/17.72x17.72x11.81inch	6.4kg/14.11 lb	8 kg/17.65 lb	1 pc
B5	450x450x300mm/17.72x17.72x11.81inch	7.3 kg/16.09 lb	8.9kg/19.63 lb	1 pc
BX	450x450x320mm/17.72x17.72x12.60inch	11.4 kg/25.13 lb	12.9 kg/28.46 lb	1 pc
B4	575x575x356mm/22.64x22.64x14.02inch	17.0 kg/37.48 lb	23.5 kg/51.81 lb	1 pc

Ordering Guide (B2/B4)

EX - xxW B2/B4 D 50 D40 P H A40 T -E

Basic Model Series
EX= for all luminaires

Input wattage of luminaires
Selectable:
B2:40W/60W/80W
B4:200W/250W/300W
NO-Selectable:
350W/400W/500W/550W

Lamp Enclosure Heatsink type
B2= Lamp Enclosure Heatsink (B2)
B4= Lamp Enclosure Heatsink (B4)

Dimming
D = Dimmable

CCT
Selectable:
50 = 4000K
5000K/6500K

Degree
120 = 120 degrees

Heat Sink type
P = Heat Sink P

Input Voltage
H = 200-480 V
M = 120-347 V
Blank = 100-277 /120-277 V

LED Driver Group
T10=FD-100T-054D
A10=VA-100V-054B
G30=ELGC-300-H-AB
VP500=SS-500VP
VP600=SS-600VP
H48=HVG-480-48AB
H65=HVG-650-48AB

Dual Tunable or not
Blank = Without Tunable
T = With Tunable

Backup Power Source
Can be:
Blank = No Backup Power
-E = Backup Power

HAZARDOUS LOCATIONS LED LUMINAIRE
EX-B Spec Sheet

Pan American
Professional Lighting Manufacturer

Ordering Guide (B5/BX)

