# HAZARDOUS LOCATIONS LED LUMINAIRE
# **EX-RL Spec Sheet**

Pan American
Professional Lighting Manufacturer




## EX-RL Spec Sheet

The EX- RL Linear fixture is specifically designed to replace fluorescent lighting in Class I Division 2 hazardous area applications. Manufactured with a high-strength glass-reinforced polyester housing and a polycarbonate cover, the RL series is perfect for long-life reliability and performance in areas prone to impact, corrosion, high vibration and adverse weather. It is available in 2-foot and 4-foot versions, optional with self-contained battery systems for emergency lighting applications for a minimum of 90 minutes of operation. (Contact sales for EM option)

## Compliance

- **UL 844 Hazardous Locations**
  Class I Division 2, Groups A, B, C, D
  Class II Division 1, Groups E, F, G
  Class II Division 2, Groups F, G
  Class III
- **UL1598 Luminaires**
- **UL1598A Marine**
- **UL 8750 LED Safety**
- DNV
- ABS
- Vibration 3G
- NEMA Type 4X
- IP66
- IK10

## Application

- Power Plants
- Heavy Industrials Storage Facility
- Paper mills
- Wastewater Treatment Plants
- Offshore Environments
- Chemical Processing Facility
- Petrochemical Processing Facility
- Metallurgical Industry
- Coal Mine
- Food and Alcohol industry

# HAZARDOUS LOCATIONS LED LUMINAIRE
# EX-RL Spec Sheet

Pan American
Professional Lighting Manufacturer

## Benefits & Features



- Adopting the new snap-fit structure design, the luminaire enables easy opening and closing, reduces product weight, and achieves superior performance during vibration testing
- Replaceable LED light strip
- Available in two lengths: 2-feet, 4-feet
- Built-in low voltage Microwave sensor (Optional)
- Self contained battery system (Optional)
- Standard Fixed mounting bracket for surface mount and rope for pendant mount, optional pole mount (purchased separately)
- Interlock kit for quick access to connect and maintenance
- Glass-reinforced polyester housing, excellent for high corrosion applications
- UV Stabilized, impact-resistant fiberglass reinforced polycarbonate lens (clear for standard, frosted for optional)

## Key Features and Information

• Electrical

| Model | EX-xxxW RL2 | EX-xxxW RL4 |
|---|---|---|
| Selectable Power | 20W/30W/40W | 40W/50W/60W |
| Power Model | RL2: SS-55EP-M54BH for 120-347V or VA-40V-054B for 277-480VAC<br>RL4: SS-75EP-M54BH for 120-347V or HVG-100-48AB for 277-480VAC | |
| Input Voltage | 120-347VAC or 277-480VAC | |
| Input Frequency | 50/60Hz | |
| Power Factor @120V | > 0.95 | |
| Optional Emergency Function | Min. 90 mins (Contact sales for EM options) | |
| Service Life | Up to 50,000 hours | |
| Salt Spray | 500Hours | |
| Dimming | Driver includes dimming control wiring for 1-10V dimming systems.<br>Requires separate 1-10V DC dimming circuit. | |



# HAZARDOUS LOCATIONS LED LUMINAIRE
# **EX-RL Spec Sheet**

Pan American
Professional Lighting Manufacturer

## • Optical

| Model | EX-xxxW RL2 | EX-xxxW RL4 |
|---|---|---|
| Selectable Power | 20W/30W/40W | 40W/50W/60W |
| Lumens Per Watt | 180lm/W | 180lm/W |
| Lumen Output | 3600–7200lm | 7200–10800lm |
| Selectable CCT | 4000K/5000K/6500K | |
| CRI | 80 | |
| Beam Angle | 120° | |
| LED | Long-life, high-efficacy, discrete, surface-mount 2835 LEDs<br>100,000-Hour LED lifespan based on IES LM-80 results and TM-21 | |



*(Note: Refer to the table of testing data on page 4.)*

## • Mechanical

| Model | EX-xxxW RL2/ RL4 |
|---|---|
| Housing Material | FRP (Fiber Reinforced Plastics) |
| Lens Material | Transparent fiberglass-reinforced polycarbonate (standard)<br>Diffuse fiberglass-reinforced polycarbonate (optional) |
| Gasket Material | Silicone Rubber |
| Cover | PC |
| Protection Rating | Ingress protection: IP66 Impact protection: IK10 |
| Mounting Options | Surface mount (Standard) ; Rope mount (Standard) ; Pole mount (Purchase separately) |
| Cable Entries | 3/4" NPT |
| Warranty | 5-year limited warranty for fixture ; 3-year limited warranty for battery backup |

## • Ambient Temperature

| Model | Input Voltage | Power Model | Temperature Class |
|---|---|---|---|
| RL2 | 120-347VAC | SS-55EP-M54BH | T5:-40°C to +60°C (CIDII) |
| | 277-480VAC | VA-40V-054B | |
| RL4 | 120-347VAC | SS-75EP-M54BH | T5:-40°C to +60°C (CIDII) |
| | 277-480VAC | HVG-100-48AB | |

# HAZARDOUS LOCATIONS LED LUMINAIRE
# **EX-RL Spec Sheet**

Pan American
Professional Lighting Manufacturer

- Electrical specification (actual measurement)

| Model | EX-40WRL2D50D120AHA40T | | | | | | | | |
|---|---|---|---|---|---|---|---|---|---|
| Test Power | 40W | | | 30W | | | 20W | | |
| Test CCT (K) | 6500 | 5000 | 4000 | 6500 | 5000 | 4000 | 6500 | 5000 | 4000 |
| Lumens Per Watt (lm/W) | 170.59 | 174.5 | 172.09 | 170.35 | 173.73 | 172.68 | 167.23 | 169.78 | 170.22 |
| Lumen Output (lm) | 7095.4 | 7133.6 | 7161.8 | 5395.7 | 5421.3 | 5462.9 | 3417.3 | 3418.3 | 3475.6 |
| Beam Angle | 116.1 | 116.2 | 116.3 | 116.1 | 116.2 | 116.3 | 116.1 | 116.3 | 116.4 |
| CCT (K) | 6378 | 5021 | 4060 | 6356 | 5019 | 4055 | 6347 | 5019 | 4055 |
| CRI | 74.8 | 75.4 | 75 | 74.7 | 75.4 | 75.1 | 74.8 | 75.4 | 75.1 |
| Power Factor | 0.9988 | 0.9988 | 0.9988 | 0.9986 | 0.9986 | 0.9987 | 0.9971 | 0.9971 | 0.9971 |
| Test Voltage | 120VAC | | | | | | | | |
| Test Power Model | SS-55EP-M54BH | | | | | | | | |

| Model | EX-60WRL4D50D120AHH10T | | | | | | | | |
|---|---|---|---|---|---|---|---|---|---|
| Test Power | 60W | | | 50W | | | 40W | | |
| Test CCT (K) | 6500 | 5000 | 4000 | 6500 | 5000 | 4000 | 6500 | 5000 | 4000 |
| Lumens Per Watt (lm/W) | 169.58 | 171.51 | 168.87 | 170.1 | 171.78 | 169.96 | 178.05 | 180.91 | 181.28 |
| Lumen Output (lm) | 10453 | 10385 | 10431 | 8604.8 | 8567.8 | 8652.5 | 6950.1 | 6922.6 | 7071.7 |
| Beam Angle | 116.4 | 116.2 | 115.7 | 116.5 | 115.9 | 115.3 | 116.6 | 115.9 | 116.5 |
| CCT (K) | 6302 | 5196 | 4098 | 6290 | 5213 | 4098 | 6287 | 5233 | 4092 |
| CRI | 83.7 | 83.7 | 82.3 | 83.6 | 83.7 | 82.4 | 83.7 | 83.7 | 82.4 |
| Power Factor | 0.9994 | 0.9994 | 0.9994 | 0.9991 | 0.9991 | 0.9991 | 0.9985 | 0.9984 | 0.9985 |
| Test Voltage | 120VAC | | | | | | | | |
| Test Power Model | SS-75EP-M54BH | | | | | | | | |

# HAZARDOUS LOCATIONS LED LUMINAIRE
# EX-RL Spec Sheet

Pan American
Professional Lighting Manufacturer

## Power and CCT Selectable

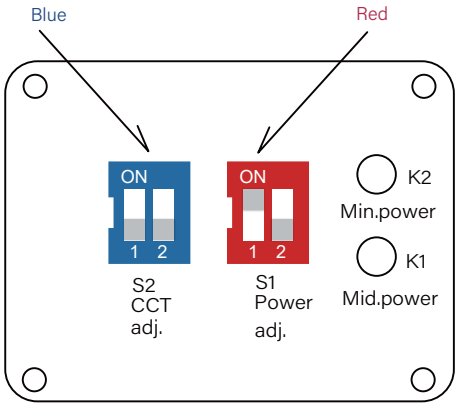


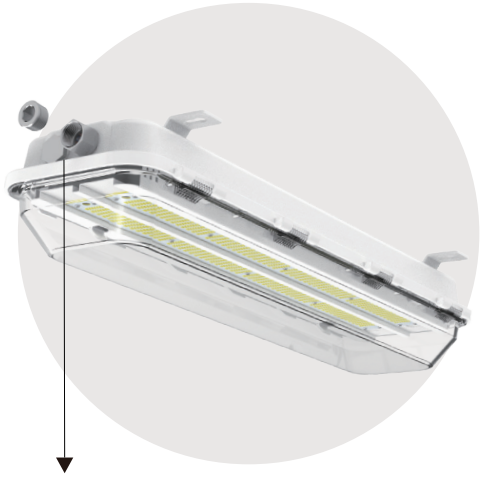

Power and CCT Selectable

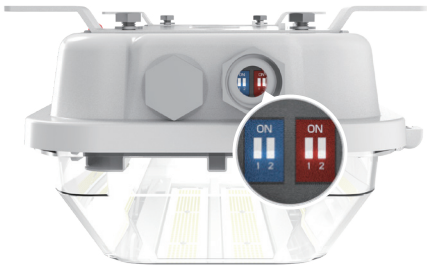


DIP switch

## Operating Instructions

- **S1 DIP switch - Red (S1 Power adj.)**

The luminaire incorporates a dual-dial power configuration switch enabling three selectable output ratings. Factory default settings and power levels can be customized based on project requirements.

1. Maximum Output (100% nominal power)
Switch configuration: Dial 1 = OFF, Dial 2 = OFF;




RL2: 40W

2. Medium Output (70%-90% of nominal power, depending on specification)Switch configuration: Dial 1 = ON, Dial 2 = OFF




RL2: 30W

3. Minimum Output (50%-70% of nominal power, depending on specification)Switch configuration: Dial 1 = OFF, Dial 2 = ON




RL2: 20W

- **S2 DIP switch - Blue (S2 CCT adj.)**

The luminaire incorporates a dual-dial power configuration switch enabling three preset color temperature options. The factory default setting can be customized according to order requirements.

1. Cool white, e.g. 6500K
Switch configuration: Dial 1 = OFF, Dial 2 = OFF




6500K

2. Neutral white, e.g. 5000K
Switch configuration: Dial 1 = ON, Dial 2 = OFF




5000K

3. Warm white, e.g. 4000K
Switch configuration: Dial 1 = ON, Dial 2 = ON




4000K

# HAZARDOUS LOCATIONS LED LUMINAIRE
# **EX-RL Spec Sheet**

Pan American
Professional Lighting Manufacturer

## Product Dimensions Unit: mm[inch]

- RL2

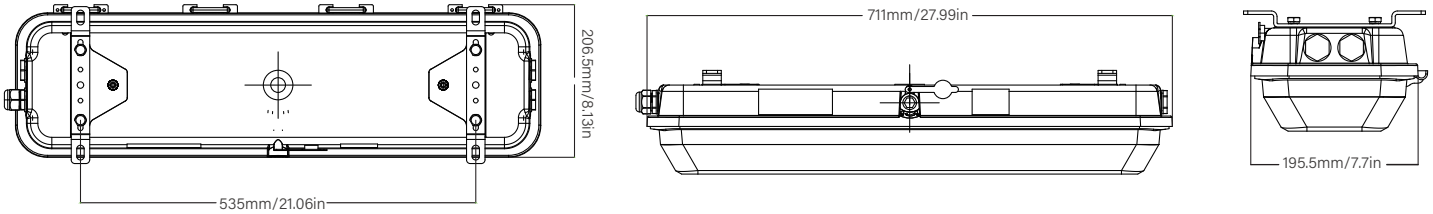


- RL4

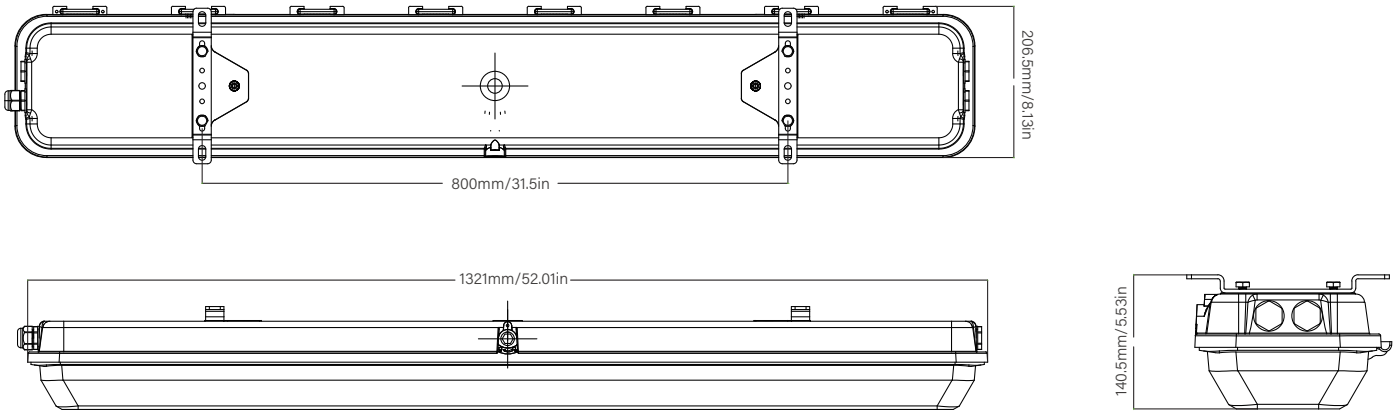


## Packing Information

| Model | Package Dimensions | Net Weight | Gross Weight | Quantity/Carton |
|---|---|---|---|---|
| RL2 | 880x270x200mm/34.65x10.63x7.87inch | 4 kg/ 8.82 lb | 7.3 kg/ 16.09 lb | 1 pc |
| RL4 | 1480x270x200mm58.27x10.63x7.87inch | 8 kg/ 17.64 lb | 13.6 kg/ 29.98 lb | 1 pc |

# HAZARDOUS LOCATIONS LED LUMINAIRE
# **EX-RL Spec Sheet**

Pan American
Professional Lighting Manufacturer

## Photometric

- 120 Degree

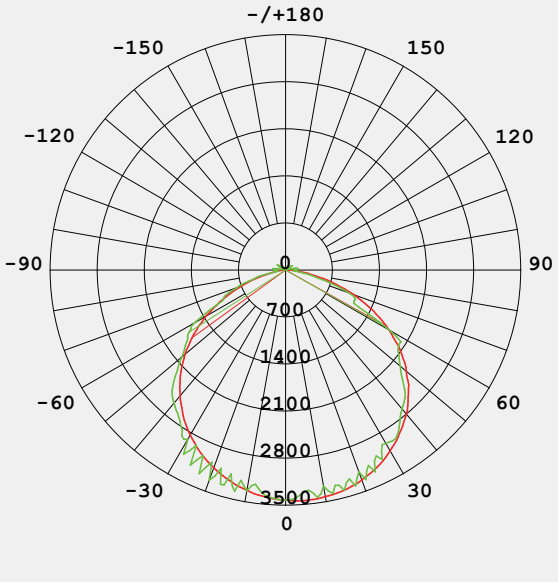


AVERAGE BEAMANGLE(50%): 116.2DEG

## Mounting Methods

- Option 1: Surface Mounting

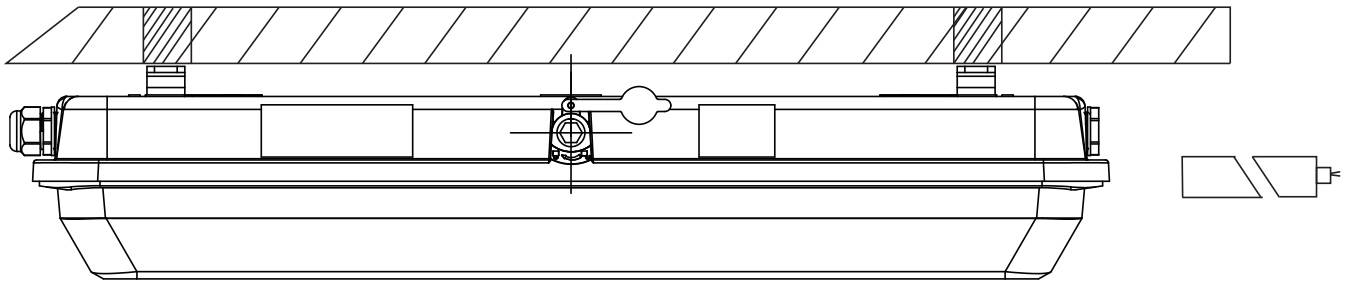

## Mounting Methods

- Option 2: Rope Mounting

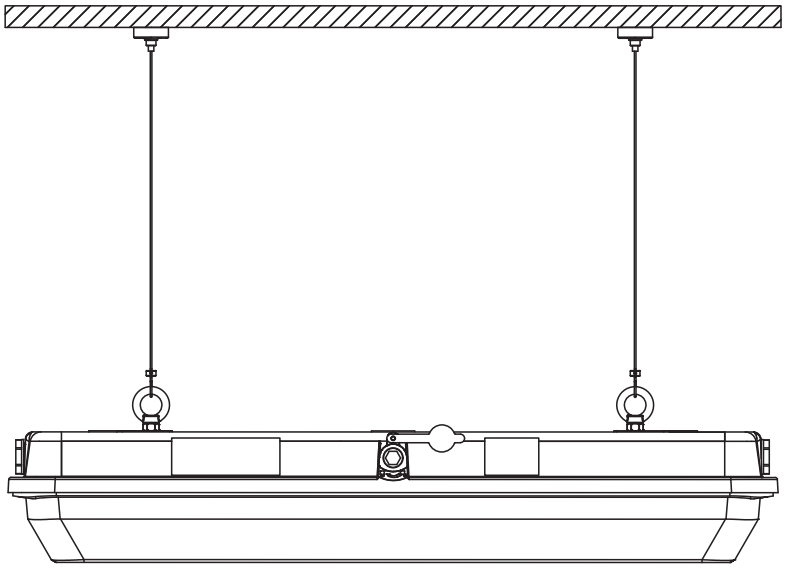

- Option 3: Pole Mounting

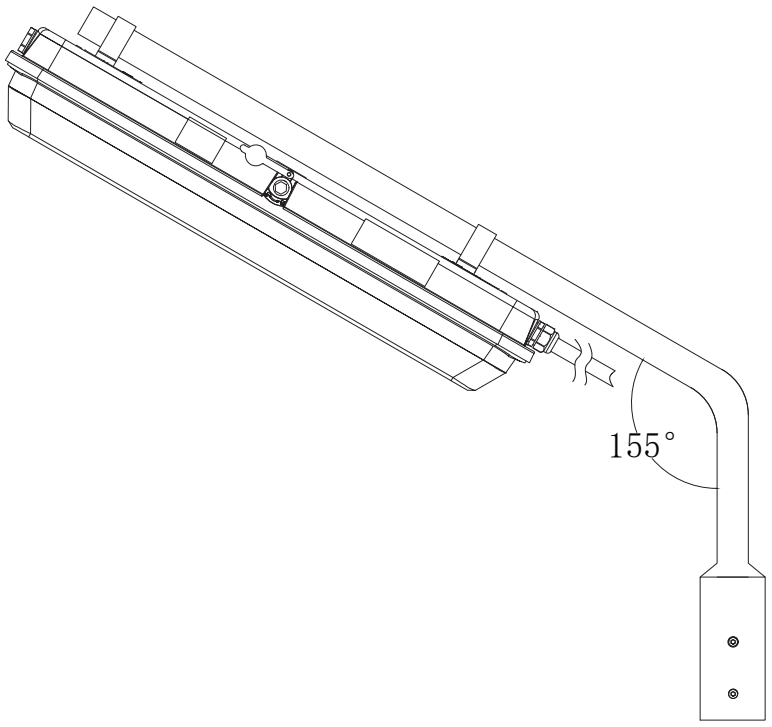

# HAZARDOUS LOCATIONS LED LUMINAIRE
# **EX-RL Spec Sheet**

Pan American
Professional Lighting Manufacturer

## Accessories

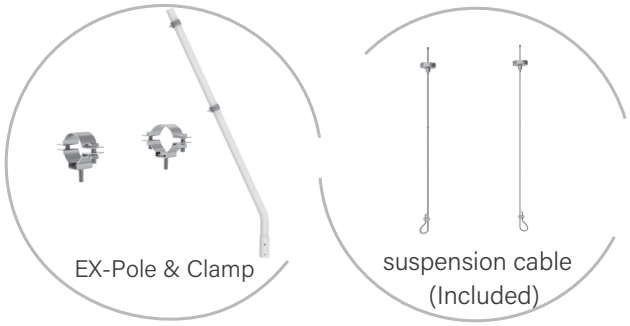


## Ordering Guide

EX - xxW RL D 50 D120 2 H E55 T -S -E

**Basic Model Series**
EX-for all luminaires

**Input wattage rating**
Selectable:
RL2:20W/30W/40W
RL4:40W/50W/60W

**luminaire Tank length**
Can be:
RL2 – 2 feet
RL4 – 4 feet

**Dimming function**
D = Dimmable

**LED CCT**
Selectable:
40= 4000K
50= 5000K
65= 6500K

**Beam angle**
D = 120 degree

**LED Module**
2 = 2835 LED
Blank = 2835 tunable LED Module

**Type of Input**
H = 277-480Vac
L = 100-277V or 120-277Vac
M = 120-347Vac

**Driver Group**
E55 = SS-55EP-M54BH
A40 = VA-40V-054B
EP75 = SS-75EP-M54BH
H10 = HVG-100-48AB

**Dual Tunable or not**
Blank = Without Tunable
T = With Tunable

**Sensor**
-S=with Low Voltage motion sensor
Blank = Without Sensor

**Backup Power**
Blank = without Backup Power
-E = with Backup Power