HAZARDOUS LOCATIONS LED LUMINAIRE
EX-S Spec Sheet

Pan American
Professional Lighting Manufacturer

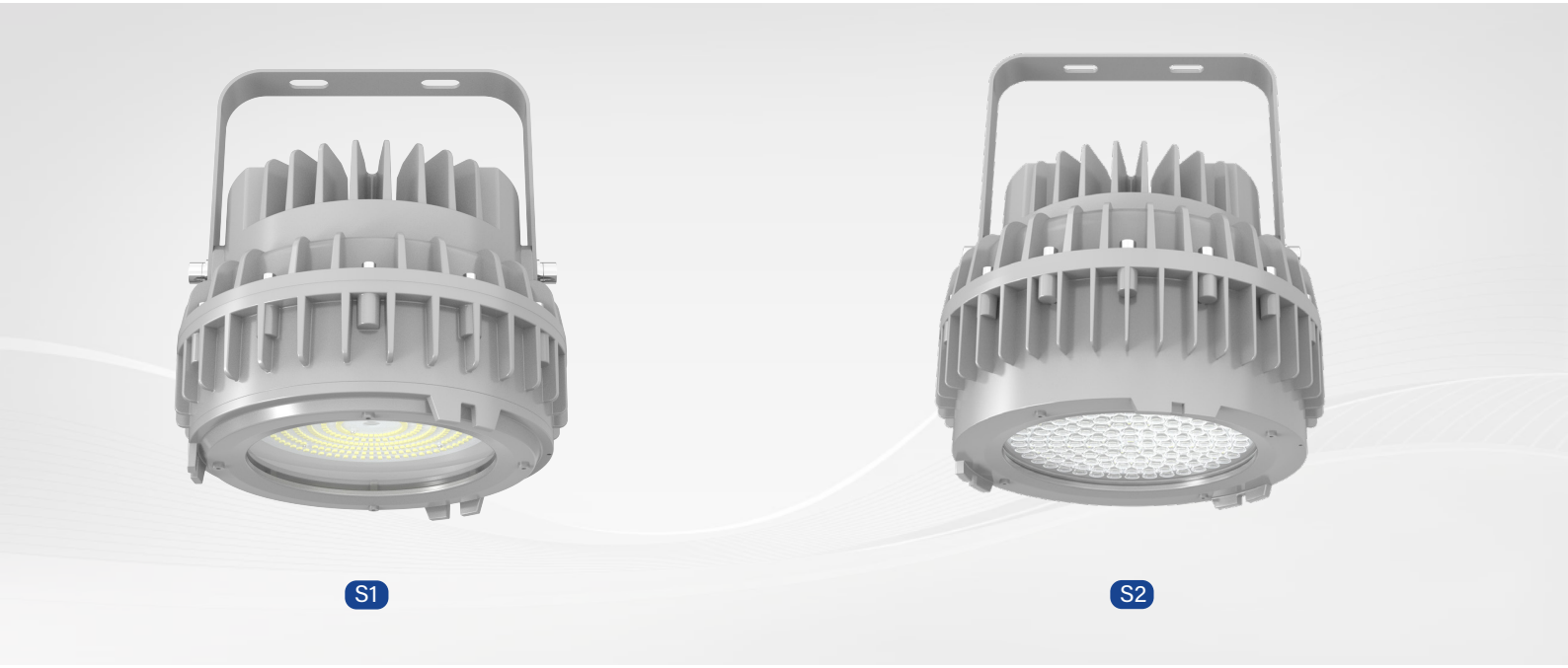

EX-S Spec Sheet

The S Series LED luminaire is designed for installations in hazardous areas where moisture, dirt, dust, corrosion and vibration may be present, or areas where wind, water, snow or high ambient temperature can be expected. Flame-proof and increased safe functions enhance safety and reliability, which makes this product an ideal lighting solution for hazardous locations.

Compliance

- UL 844 Hazardous Locations Class
  Class I Division 1, Groups B, C and D
  Class I Division 2, Groups A, B, C and D
  Class II Division 1, Groups E, F and G
  Class II Division 2, Groups F and G
  Class III
- UL 1598 Wet Locations
- UL 1598A Marine Outside Type
- DNV
- ABS
- Vibration 3G
- NEMA Type 4X
- IP66
- IK10

Application

- Power Plants
- Heavy Industrial Storage Facility
- Paper mills
- Wastewater Treatment Plants
- Loading Docks Platforms
- Offshore Environments
- Chemical Processing Facility
- Petrochemical Processing Facility
- Metallurgical Industry
- Coal Mine
- Food and Alcohol industry

HAZARDOUS LOCATIONS LED LUMINAIRE
EX-S Spec Sheet

Pan American
Professional Lighting Manufacturer

Benefits &Features



- Flat glass and convex glass diffusers are optional
- Combined flame-proof and increased safety function, enhanced safety and reliability
- Compact and rugged structure, easy installation
- Various installation ways for different applications
- Great impact resistance with IK08/IK10 certification
- Copper-free aluminum housing, great corrosion resistance and cooling performance
- Tempered glass for high heat resistance

Key Features and Information

• Electrical

Model	EX-xxxW S1	EX-xxxW S2
Selectable Power	60W/80W/100W	120W/150W/200W
Power Model	S1: SS-150VA-56BHL for 120-277VAC ; VA-150V-056B for 277-480VAC S2: SS-240VA-56BHL for 120-277VAC ; VA-240V-056B for 277-480VAC	
Input Voltage	120 - 277VAC/277 - 480VAC	
Input Frequency	50/60Hz	
Power Factor @120V	> 0.95	
Optional Emergency Function	Min. 90 mins (Contact sales for EM options)	
Service Life	Up to 50,000 hours	
Salt Spray	500Hours	
Dimming	Driver includes dimming control wiring for 1-10V dimming systems. Requires separate 1-10V DC dimming circuit.	



HAZARDOUS LOCATIONS LED LUMINAIRE
EX-S Spec Sheet

Pan American
Professional Lighting Manufacturer

• Optical

Model	EX-xxxW S1	EX-xxxW S2
Selectable Power	60W/80W/100W	120W/150W/200W
Lumens Per Watt	145lm/W	155lm/W
Lumen Output	8700-14500lm	18600-31000lm
Selectable CCT	4000K/5000K/6500K	
CRI	＞70	
Beam Angle	120°	
LED	Long-life, high-efficacy, discrete, surface-mount 2835 LEDs 100,000-Hour LED lifespan based on IES LM-80 results and TM-21	



(Note:Refer to the table of testing data on page 4.)

• Mechanical

Model	EX-xxxW S1/S2
Housing Material	Die-cast aluminum
Diffuse Material	Standard: Clear flat lens; Optional: Clear convex glass /Frosted convex glass/Frosted flat glass
Gasket Material	Silicone Rubber
Latches/Clips Material	Stainless steel hardware
Protection Rating	Ingress protection: IP66 Impact protection: IK10
Mounting Options	Ceiling/U-bracket MountCeiling (Included), Pole Mount (25°)(Purchase separately) , Pendant /Jib Mount (Purchase separately) , Pole +junction box mount(Purchase separately)
Cable Entries	NPT 3/4"
Warranty	5-year limited warranty for fixture

• Ambient Temperature

Model	Input Voltage	Power Model	Temperature Class
S1	120-277VAC	SS-150VA-56BHL	T6: -40°C to 50°C (CIDI) ; T5:-40°C to 55°C (CIDII) ; T5:-40℃to +40℃(CIIDI/CIIDII/CIII)
	277-480VAC	VA-150V-056B	T6: -40°C to 50°C (CIDI) ; T5:-40°C to 50°C (CIDII) ; T5:-40℃to +40℃(CIIDI/CIIDII/CIII)
S2	120-277VAC	SS-240VA-56BHL	T6: -40°C to 50°C (CIDI) ; T5:-40℃ to +50℃(CIDII); T5:-40℃to +40℃(CIIDI/CIIDII/CIII)
	277-480VAC	VA-240V-056B	

HAZARDOUS LOCATIONS LED LUMINAIRE
EX-S Spec Sheet

Pan American
Professional Lighting Manufacturer

- Electrical specification (actual measurement)

Model	EX-100WS1D50D120V15T								
Test Power	100W			80W			60W		
Test CCT (K)	6500	5000	4000	6500	5000	4000	6500	5000	4000
Lumens Per Watt (l/m)	141.59	149.38	140.92	141.97	149.57	142.88	147.15	152.64	147.23
Lumen Output (lm)	14600	14882	14486	11846	12105	11881	9188.9	9299.5	9193.1
Beam Angle	101.7	100.9	100.5	100.9	100.7	100.5	102.1	101.6	101.3
CCT (K)	6304	5050	4195	6280	5043	4190	6257	5035	4188
CRI	72.9	73.4	73.2	72.8	73.4	73.2	72.9	73.4	73.3
Power Factor	0.9956	0.9956	0.9956	0.9926	0.9918	0.9927	0.9869	0.9863	0.9868
Test Voltage	120VAC								
Test Power Model	SS-150VA-56BHL								

Model	EX-200WS2D50D120V24T								
Test Power	200W			150W			120W		
Test CCT (K)	6500	5000	4000	6500	5000	4000	6500	5000	4000
Lumens Per Watt (l/m)	158.58	169.05	159.93	163.18	171.36	163.96	165.67	172.86	166.51
Lumen Output (lm)	31785	32804	32170	24689	25224	24744	20104	20460	20192
Beam Angle	107.7	107.5	107.2	107.7	107.5	107.2	107.8	107.5	107.3
CCT (K)	6349	5037	4146	6322	5028	4141	6300	5021	4136
CRI	73	73.5	73.1	73.1	73.5	73.1	73.1	73.5	73.1
Power Factor	0.9966	0.9964	0.9965	0.996	0.9953	0.996	0.9931	0.993	0.9931
Test Voltage	120VAC								
Test Power Model	SS-240VA-56BHL								

HAZARDOUS LOCATIONS LED LUMINAIRE
EX-S Spec Sheet

Pan American
Professional Lighting Manufacturer

Power and CCT Selectable

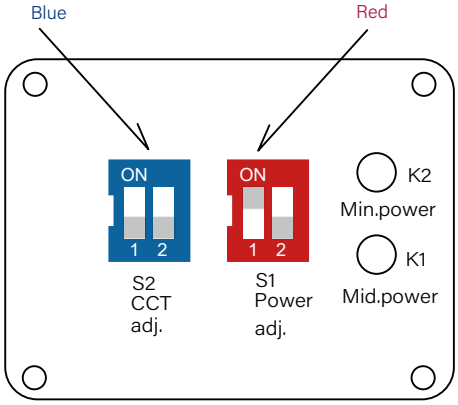

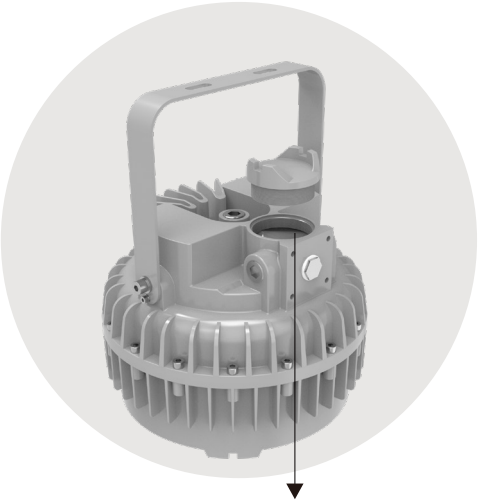

Power and CCT Selectable

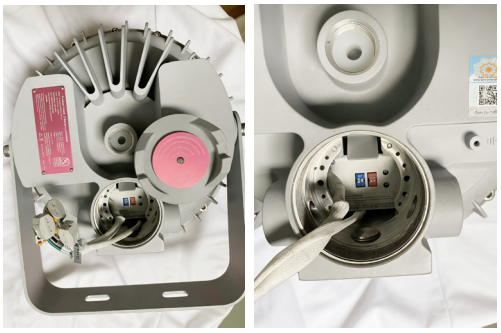

DIP switch

Operating Instructions

- **S1 DIP switch - Red (S1 Power adj.)**

The luminaire incorporates a dual-dial power configuration switch enabling three selectable output ratings. Factory default settings and power levels can be customized based on project requirements.

1. Maximum Output (100% nominal power)
Switch configuration: Dial 1 = OFF, Dial 2 = OFF;



S2: 200W

2. Medium Output (70%-90% of nominal power, depending on specification)Switch configuration: Dial 1 = ON, Dial 2 = OFF



S2: 150W

3. Minimum Output (50%-70% of nominal power, depending on specification)Switch configuration: Dial 1 = OFF, Dial 2 = ON



S2: 120W

- **S2 DIP switch - Blue (S2 CCT adj.)**

The luminaire incorporates a dual-dial power configuration switch enabling three preset color temperature options. The factory default setting can be customized according to order requirements.

1. Cool white, e.g. 6500K
Switch configuration: Dial 1 = OFF, Dial 2 = OFF



6500K

2. Neutral white, e.g. 5000K
Switch configuration: Dial 1 = ON, Dial 2 = OFF



5000K

3. Warm white, e.g. 4000K
Switch configuration: Dial 1 = ON, Dial 2 = ON



4000K

Product Dimensions Unit: mm[inch]

- S1

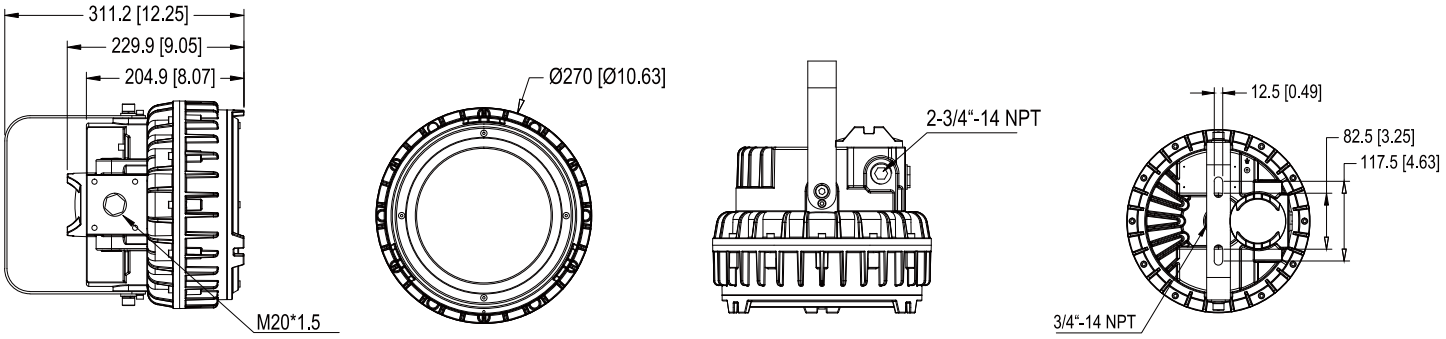

- S2

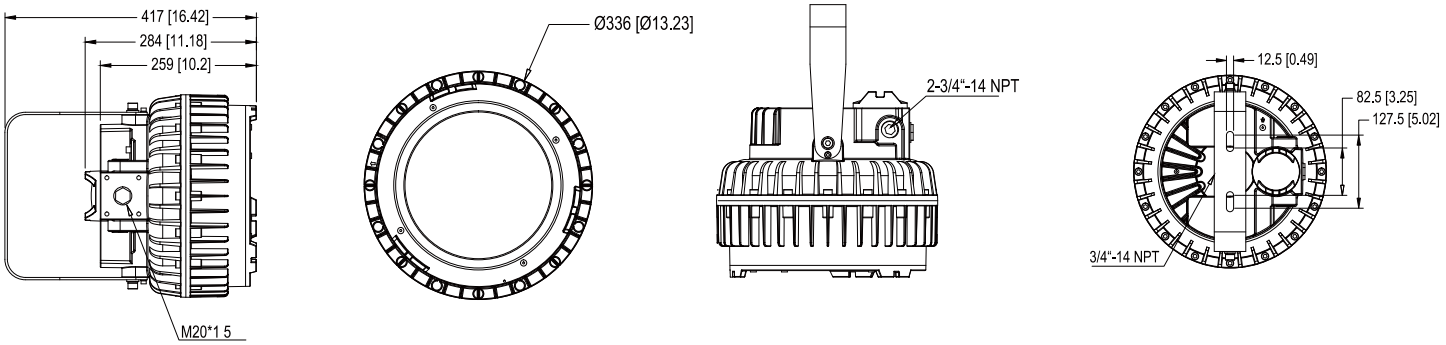

Mounting Methods

- Option 1: Ceiling/U-bracket Mounting

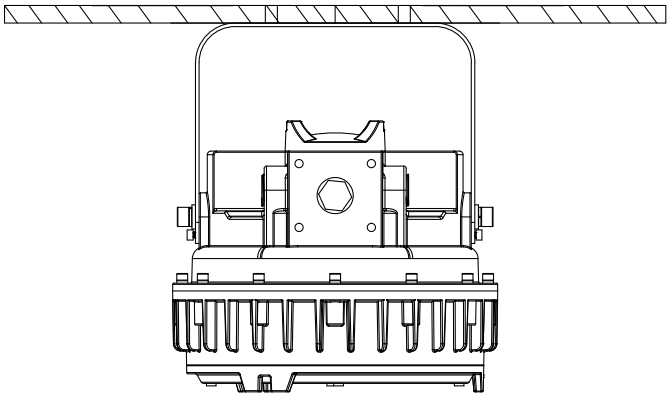

- Option 2: Pole Mounting (25°)

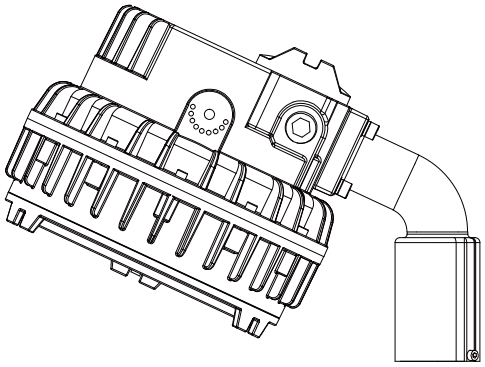

- Option 3: Pendant /Jib Mounting

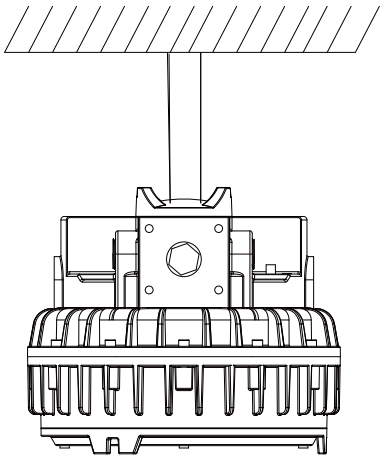

- Option 4: Pole + junction box Mounting

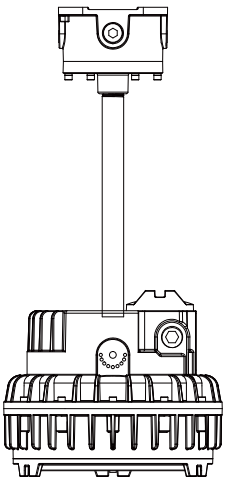

HAZARDOUS LOCATIONS LED LUMINAIRE
EX-S Spec Sheet

Pan American
Professional Lighting Manufacturer

Photometric

- 120 Degree

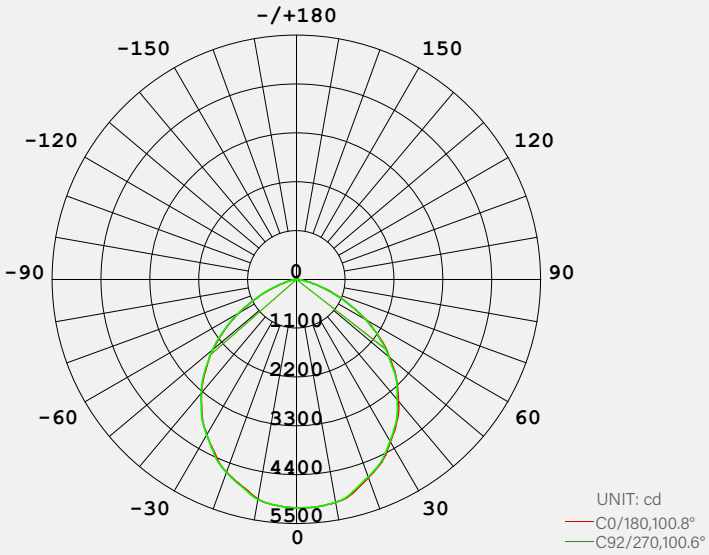

AVERAGE BEAMANGLE(50%): 110.7 DEG

Packing Information

Model	Package Dimensions	Net Weight	Gross Weight	Quantity/Carton
S1	470x420x320mm/18.50x16.54x12.60 in	11.1 kg/24.47 lb	12.8 kg/28.22 lb	1 pc
S2	540x460x370mm/21.26x18.11x14.57 in	19.6 kg/43.21 lb	21.9 kg/48.28 lb	1 pc

Accessories


EX-Straight Pipe


EX-HD51-KB1


S-25° Pole Mount Bracket


S-Bracket (Type S)

HAZARDOUS LOCATIONS LED LUMINAIRE
EX-S Spec Sheet

Pan American
Professional Lighting Manufacturer

Ordering Guide

EX - xxW S1/S2 Y 50 D G I J L M

Basic model series
it can be EX

Rated Input Wattage
Selectable:
S1: 60W/80W/100W
S2: 120W/150W/200W

Lamp Enclosure Heatsink
S1 = Lamp Enclosure Heatsink (S1)
S2 = Lamp Enclosure Heatsink (S2)

Dimming
Blank = No Dimming function
D = Dimmable

CCT
Selectable:
50 = 4000K
5000K
6500K

Beam angle
D120 = 120 degrees

Type of installation
P25 = Pole Mounting (25°)
J = Jib Mounting
Blank = U-bracket Mounting

Input Voltag
H – 200–480V
Blank – 120-277V
M – 120-347V

Type of LED Driver
V15=SS-150VA-56BHL
V24=SS-240VA-56BHL
A15=VA-150V-056B
A24=VA-240V-056B

Dual Tunable or not
Blank = Without Tunable
T= With Tunable

Accessories use only
-E= Backup Driver is provided
(For S2 series and rated for 20/30 40/ 50/60/80/ 100W only, see item 20 of description for details)
Blank = Backup Driver is not provided