Pan American
Professional Lighting Manufacturer



HAZARDOUS LOCATIONS LED LUMINAIRE

RL SERIES



Building 6, Zhongtang Tian'an Digital City, No. 88 Jinyuan Road,
Zhongtang Town, Dongguan, Guangdong. Zip code 523220

UL CERTIFIED · IP 66 · IK10 · DIMMABLE · 130 lm/W · 5 YEARS WARRANTY

LUMINAIRE RL SERIES

Pan American
Professional Lighting Manufacturer



Built-in low voltage Microwave Sensor (optional)

Interlock Kit

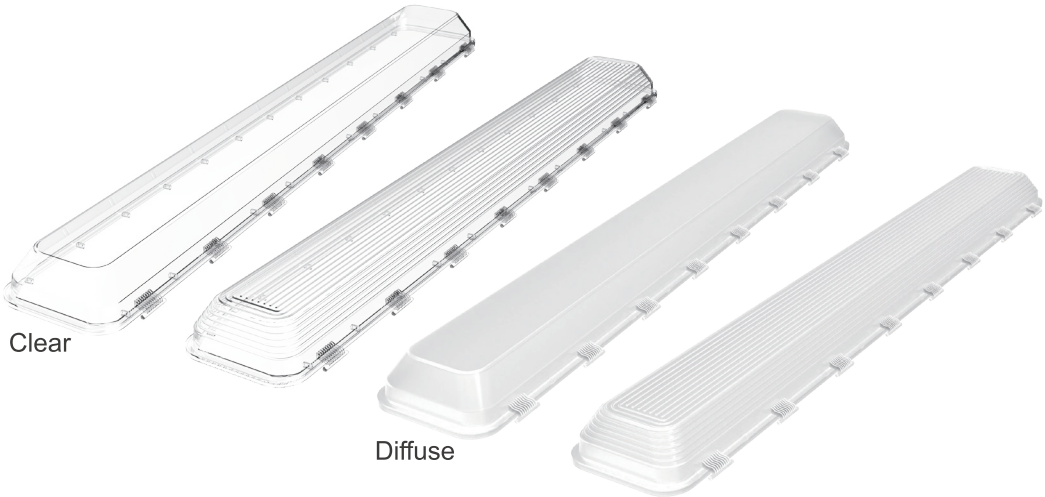

Clear

Diffuse

Product Description

The RL series linear vapor tight is designed for use in hazardous locaions where fammable gases, vapors, or liquids might be present during normal facility operations. The combination of the style and design of new LED technology with the ruggedness and durability of a hazardous location fixture makes it ideal for retrofit of existing HPS/MH and offers higher efficacy for energy savings, lower maintenance costs and shorter pavback. The optional battery backup svstem provides a minimum of 180 minutes operation after AC power is lost during an emergency.

Compliance

UL 844 Hazardous Locations

Class I Division 2, Groups A, B, C and D
Class II Division 1, Groups E, F and G
Class II Division 2, Groups F and G
Class III

UL1598 Luminaires

UL1598A Marine

UL 8750 LED Safety

Vibration 3G

NEMA4X

ABS

IP66

IK10

LUMINAIRE RL SERIES

Pan American
Professional Lighting Manufacturer

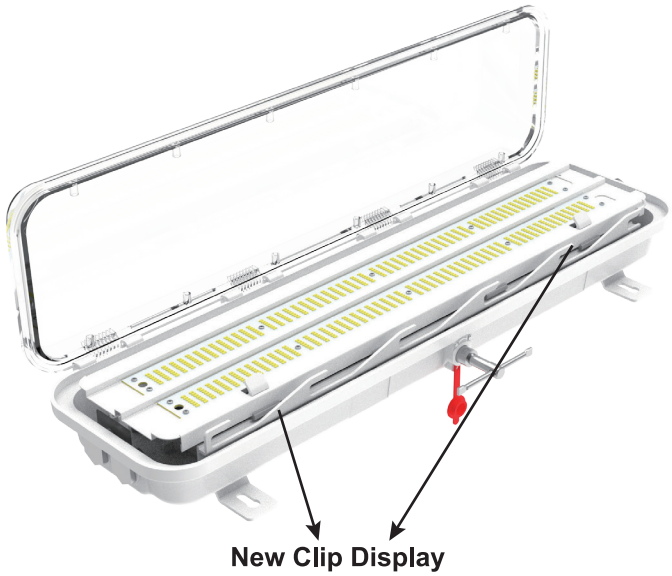

Features

- UV stabilized, impact-resistant fiberglass reinforced polycarbonate lens
- Available in two and four foot lengths
- Safety interlock kit design
- Light distribution 120 degree
- 0-10V dimming
- Replaceable LED light strip
- Water-proof, vapor-proof, dust-proof, and corrosion resistant
- Optional emergency battery back-up (self-contained min. 180 minute with Push-to-test button and LED charging indicators)
- The tool facilitates convenient opening and closing, prevents the lampshade from falling, and significantly improves maintenance efficiency and operational safety.

Application &Warranty

- Power Plants
- Heavy Industrials Storage Facility
- Paper mills
- Wastewater Treatment Plants
- Loading Docks Platforms
- Offshore Environments
- Chemical Processing Facility
- Petrochemical Processing Facility
- Metallurgical Industry
- Coal Mine
- Food and Alcohol industry

2-Year Standard Warranty for Battery Backup
5-Year Standard Warranty for Fixture

LED lumen Maintenance: L70> 150,000 Operation Hours@65°C

Technical Parameter

Electrical

Specification	Ex-xxxW RL2	Ex-xxxW RL4
Rated Power	10/12/15/18/20/25/30/36/40/50/60W	20/25/30/36/40/48/50/54/60/70/80/100W
Input Voltage	100-277VAC /120-277VAC/120-347VAC/277-480VAC	
Input Frequency	50/60Hz	
Power Factor	> 0.9	
Emergency Function	Optional emergency battery back-up (self-contained min. 90 minutes with Push-to-test button and LED charging indicators)	

Optical

Specification	EX-xxW RL2	EX-xxW RL4
Lumen Output (Normal Mode)	1300lm - 7800lm	2600lm - 13000lm
Luminous Efficacy	130 lm/W	
Beam Angle	120°	
CCT	2700K/4000K/5000K/5700K/6500K	
CRI	Ra>70	
Beam Angle	120°	
Dimming Function	0-10V dimming	

Mechanical

Specification	Ex-xxxW RL2	Ex-xxxW RL4
Structural Feature	Safety interlock kit design	
Housing Material	FRP (Fiber Reinforced Plastics)	
Diffuser type	Transparent fiberglass-reinforced polycarbonate (standard) Diffuse fiberglass-reinforced polycarbonate (optional)	
Cover	PC	
Gasket	Silicone rubber	
Latches/Clips	Aluminum alloy	
Color	Milky White	
Finish	Epoxy powder coating	
Protection	IP66(wet location)/IK10/3G Vibration/1200hrs salt spray	
Mounting	Ceiling, rope, and pole mount	
Cable entries	Standard: 4 x NPT3/4 (Side x1 open, Side x3 with stopping plugs) With Emergency: 3 x NPT3/4 (Side x1 open, Side x2 with stopping plugs) x self testing button	

Environmental

Model	Temperature Class	Power supply model
EX-20W RL2	-40°C to +65°C for T5	120 - 277 V
EX-40W RL4	-40°C to +40°C for T6	

**Please refer to the report for detailed data*

Product Dimensions Unit: mm/inch

RL2

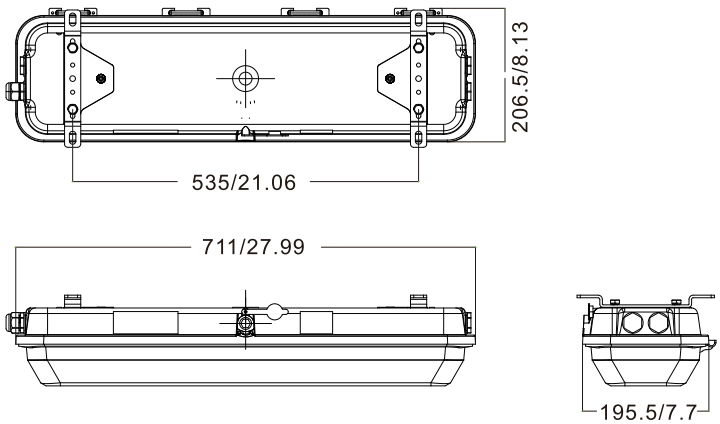

RL4

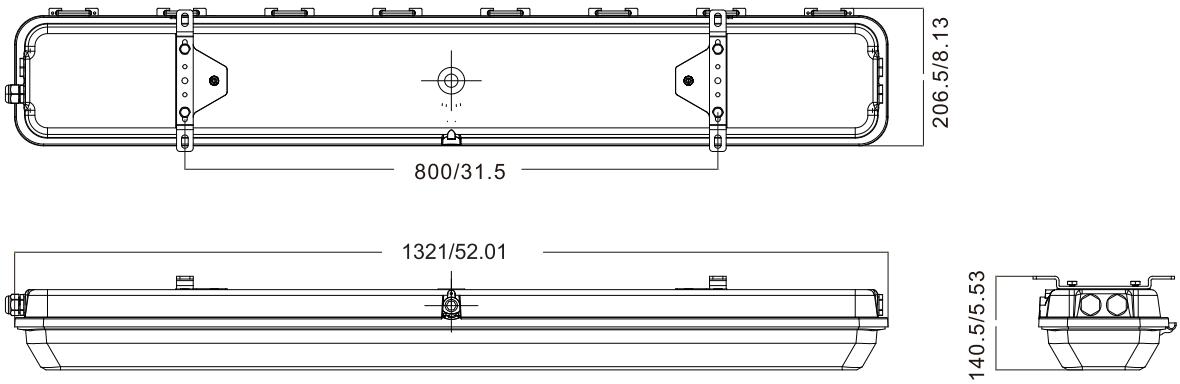

Packing Information

Model	Net Weight	Gross Weight	Quantity/Carton	Package Dimensions (LxWxH)
RL2 (standard)	4 kg/ 8.82 lb	7.3 kg/ 16.09 lb	1 pc	880x270x200mm/34.65x10.63x7.87inch
RL4 (standard)	8 kg/ 17.64 lb	13.6 kg/ 29.98 lb	1 pc	1480x270x200mm/58.27x10.63x7.87inch

Mounting Methods

- Option 1: Ceiling Mounting

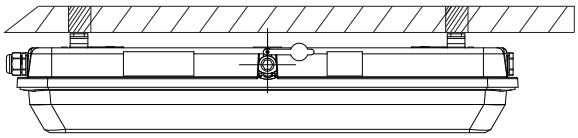

- Option 2: Rope Mounting

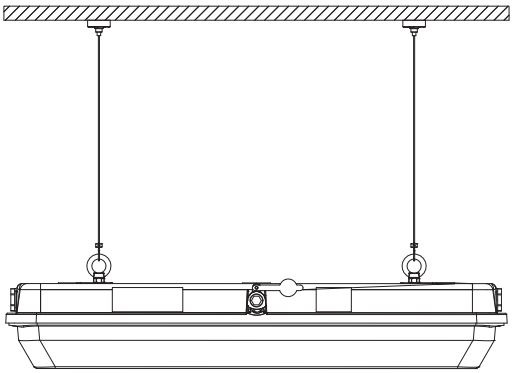

- Option 3: Pole Mounting

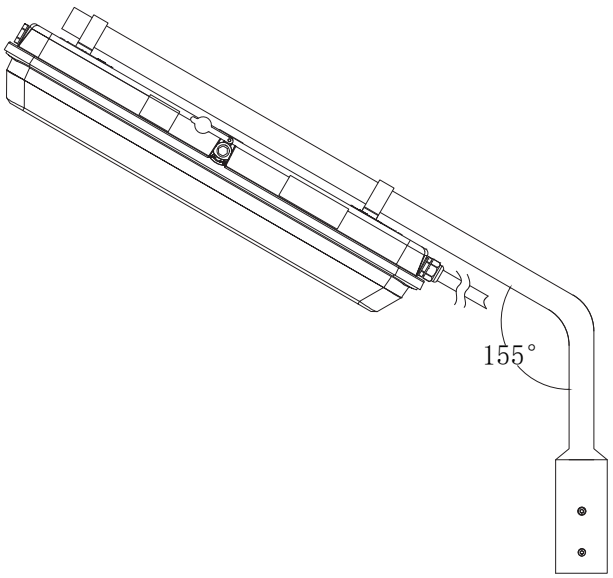

Ordering Guide

EX - xxxW RL Y 27 D * * * 2 H H65 * *

① ② ③ ④ ⑤ ⑥ ⑦ ⑧ ⑨ ⑩ ⑪ ⑫ ⑬ ⑭

1.EX	Explosion Proof Light
2.Wattage	RL2:10/12/15/18/20/25/30/36/40/50/60W RL4:20/25/30/36/40/48/50/54/60/70/80/100W
3.Tank length	RL2 = 2 feet RL4 = 4 feet
4.Dimming function	Y:Dimmable
5.CCT	27 = 2700K 40 = 4000K 50 = 5000K 57 = 5700K 65 = 6500K
6.Beam Angle	D - 120 degree
7.Designates the Tank	M = MRL Tank N = NRL Tank U = URL Tank W = WRL Tank Blank = Original Tank
8.Diffuser	Blank = Original Diffuser B = NRL Diffuser
9.Mounting	Blank – Ceiling/Wall mount R – Rope pendant mount P – Pole mount
10.LED Modle	2 = 2835 LED Blank = 2835 tunable LED Module
11.Type of Input	H = 277-480Vac Blank = 100-277V or 120-277Vac M = 120-347Vac
12.Type of Input	*Please refer to the report for detailed data*
13.CCT tunable	Blank = Not Tunable T = Tunable
14.Backup Power Source	Blank = Without Backup Power E = With Backup Power