Pan American
Professional Lighting Manufacturer



M SERIES LED SPORTS LIGHT



Applications

- Sporting Facility
- Stadium
- Container Loading Area
- Shipping Yard
- High Mast Roadway
- Airport
- Parking Lot
- Port
- Public Square

Warranty

- 5-Year Standard Warranty
- 50,000 hours L70B50@35°C

IP66 IK09

M SERIES LED SPORTS LIGHT

Pan American
Professional Lighting Manufacturer

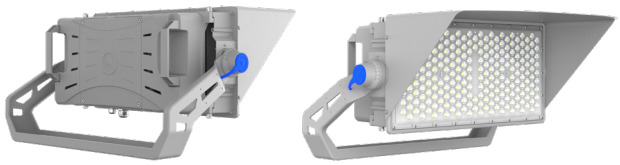

Single Model - M1

External Power Supply (Optional):
Maximum output power 600W（AC200-480V）

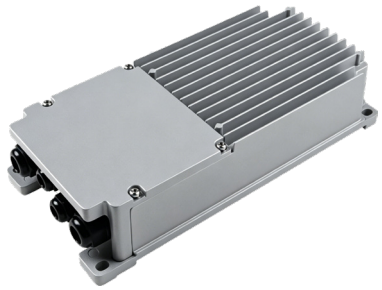



Dual Model - M2

External Power Supply (Optional):
Maximum output power 1200W（AC200-480V）

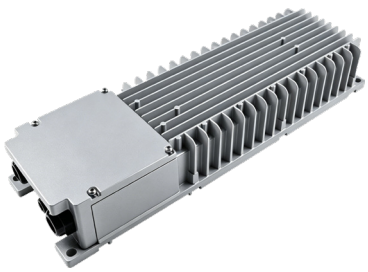

Product Description

Designed by our own R&D team, M series LED sports light producess high brightness and enhanced glare-free illumination for specific venue to create bright and comfortable lighting. Wird resistant, suitable for wet location, ideal for outdoor large places as flood and area lighting.

Features

Construction:
Ruggedly designed with die-cast aluminum housing and clear polycarbonate lens.
Professional design for heat dissipation holes, direct convection from top to bottom for heat dissipation.
Electrical:
This unit comes with 3 optional input voltage 120-277V, 200-480V or 277-480V with 10kV standard surge protection.
The unit comes with a wide CCT of 2700K to 6500K.
Mounting:
Bracket mounting: bracket and fixture are assembled before packaged.

Technical Parameter

Electrical

Specification	SP-M1xxxxW	SP-M2xxxxW
Rated Power	400W/500W/600W/650W	720W/800W/900W/1000W/1200W/1300W
Input Voltage	AC100-277V/AC200-480V/AC277-480V	
Input Frequency	50/60Hz	
Power Factor	0.95	
THD	≤15%	
Power Supply	Driver Brand: Inventronics/Sosen; Built-in power supply (standard); External power supply (optional)	
Surge Protection	10kV (Standard) / 20kV (Optional)	

Optical

Specification	SP-M1xxxxW	SP-M2xxxxW
Lumen Output @Ra70 & CCT=5000K	60,000-97,500lm (15°: 54,000-87,750lm)	108,000-195,000lm (15°: 97,200-175,500lm)
Lumens Per Wall @Ra70	150Lm/W@5000K (15°: 135Lm/W)	
Beam Angle	15°/20°/30°/40°/60°/120°	
LED Type	3737(for 15°)/5050	
CCT	2700K/3000K/4000K/5000K/6000K/6500K/RGB(optional)/RGBW(optional)	
CRI	Ra70(Standard), Ra80(Optional)	
Dimming	0-10V Dimming	
Intelligent Control	ON/OFF (standard); DMX512/DALI (optional)	

Environmental

Specification	SP-M1xxxxW	SP-M2xxxxW
Ambient Operating Temperature	-40°C to 50°C (-40°F to 122°F)	

Mechanical

Specification	SP-M1xxxxW	SP-M2xxxxW
Housing Material	Die-cast Aluminum	
Lens Material	Anti-UV PC Optical Material	
Protection	IP66/IK09	
Mounting	Bracket	
Outlet Wire	Standard outlet length is 0.5-0.8 meters, and the outlet length can be customized	
Other Device	Laser Aiming Device (optional)	

Product Dimensions

SP-M1xxxxW

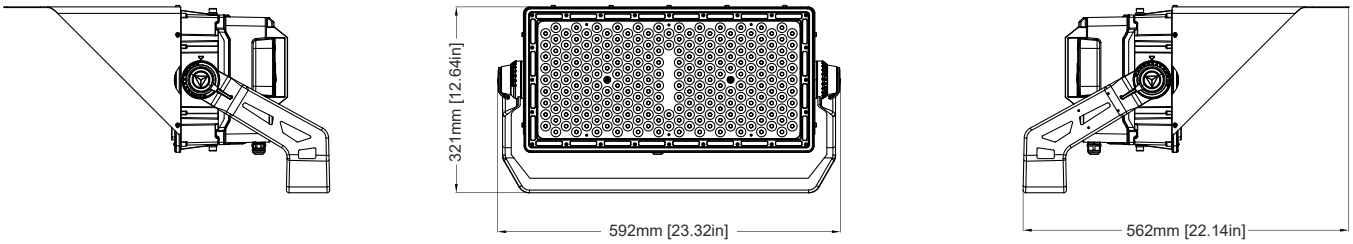

SP-M2xxxxW

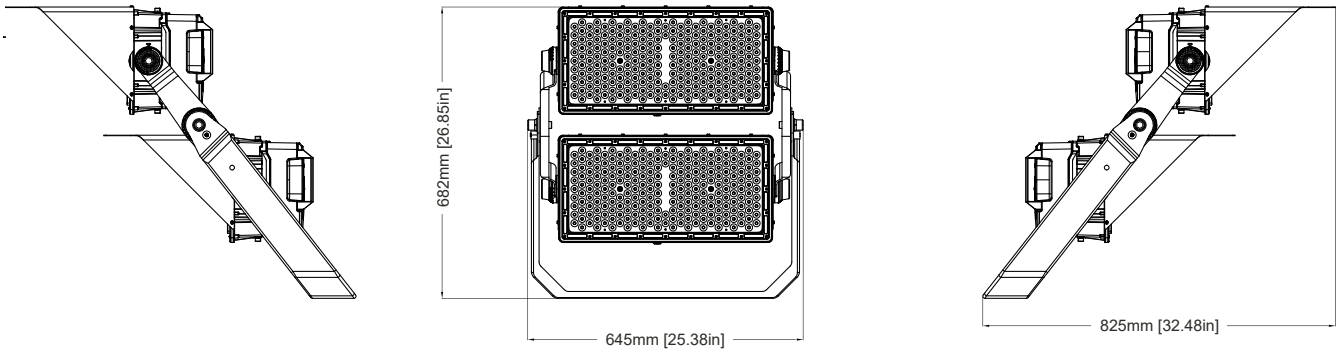

External Power Supply (Optional):
Maximum output power 600W（AC200-480V）
Unit: mm

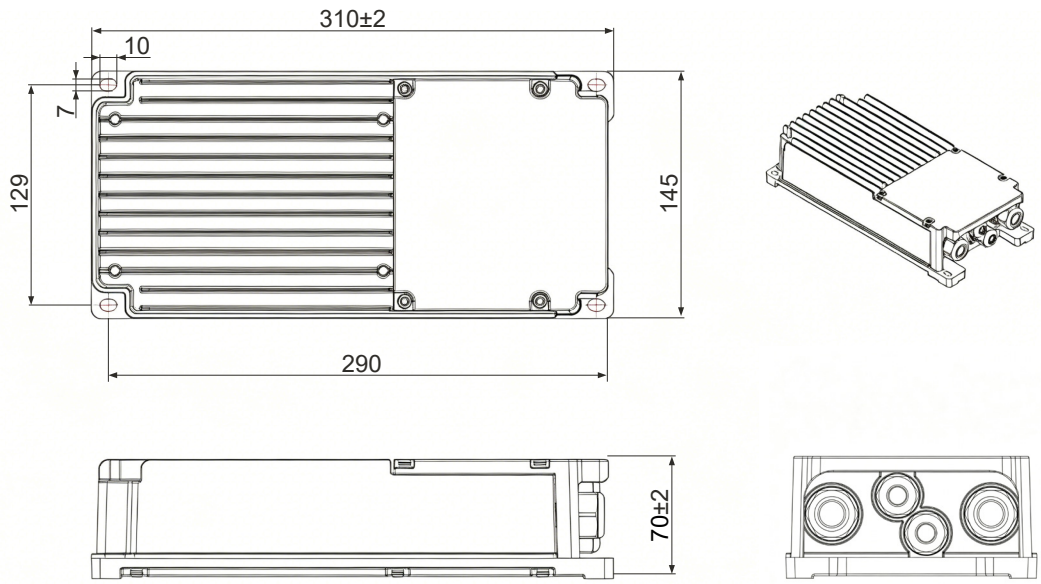

Product Dimensions

External Power Supply (Optional):
Maximum output power 1200W（AC200-480V）
Unit: mm

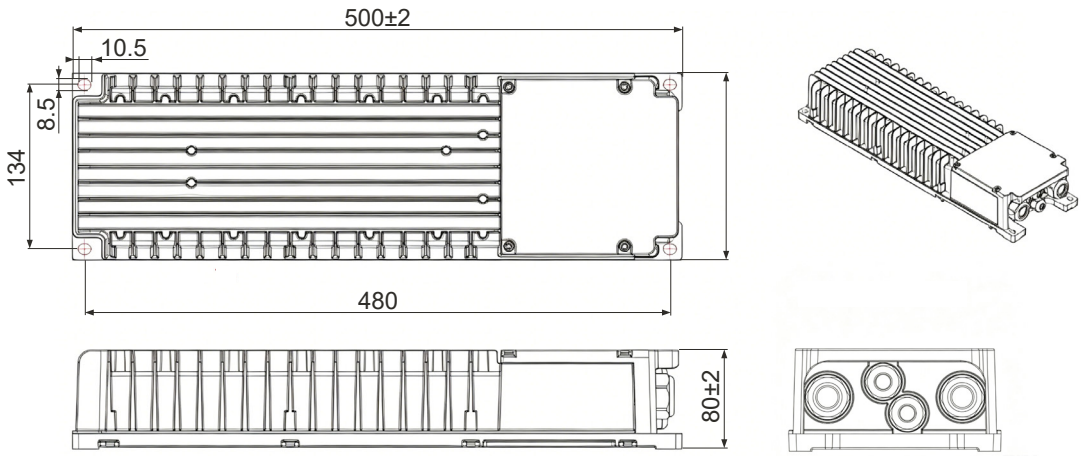

Packing Information

Model	Net Weight (Product)	Quantity/Carton	Gross Weight	Package Dimensions (LxWxH)
SP-M1xxxxW	18.3kg (40.34lbs)	1 pc	20.5kg (45.19lbs)	655x395x355mm(25.79x15.55x13.97inch)
SP-M2xxxxW	31.5kg (69.44lbs)	1 pc	34.5kg (76.06lbs)	855x700x350mm(33.66x27.56x13.78inch)
External Power Supply (for 400W/500W/600W /650W/720W/800W/900W /1000W/1200W)	6.6kg (14.55lbs)	1 pc	7.8kg (17.19lbs)	535x325x210mm(21.06x12.79x8.27inch)
External Power Supply (for 1300W)	6.1kg (13.45lbs)	1 pc	7.0kg (15.43lbs)	550x190x170mm(21.65x7.48x6.69inch)

*The package dimensions are the same for the luminaire M1/M2 withbuilt-in power supply and with external power supply.

EPA

SP-M1xxxxW

without Visor

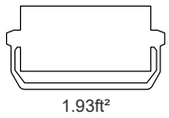

with Visor

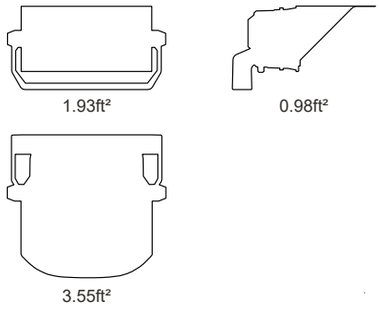

SP-M2xxxxW

without Visor

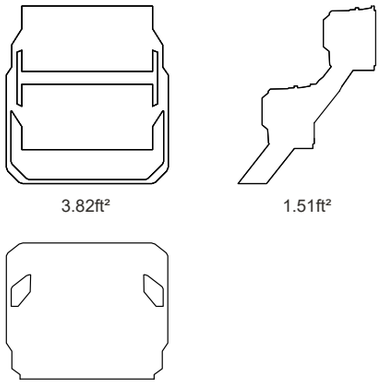

with Visor

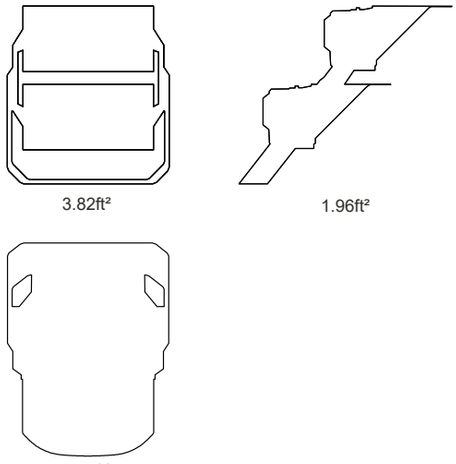

Photometric

15 degree

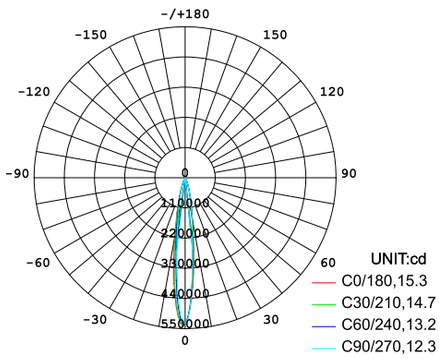

AVERAGE BEAM ANGLE(50%):13.9 DEG

20 degree

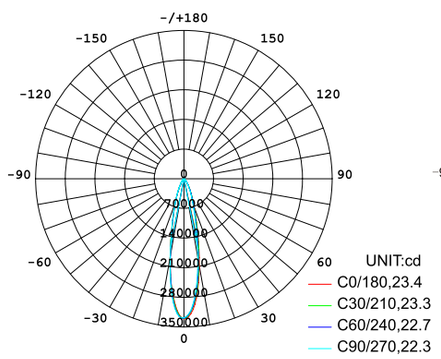

AVERAGE BEAM ANGLE(50%):22.9 DEG

30 degree

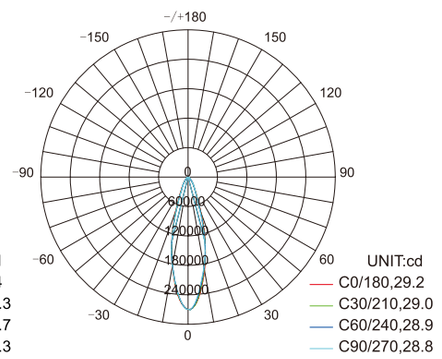

AVERAGE BEAM ANGLE(50%):29.0 DEG

40 degree

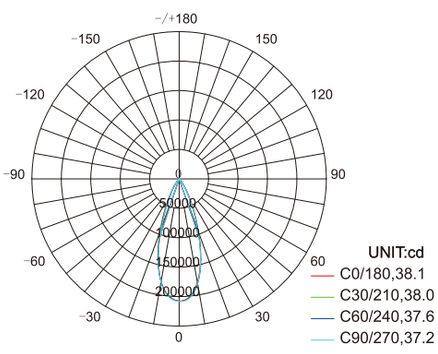

AVERAGE BEAM ANGLE(50%):37.7 DEG

60 degree

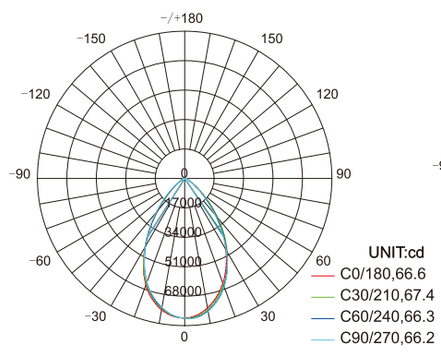

AVERAGE BEAM ANGLE(50%):66.6 DEG

120 degree

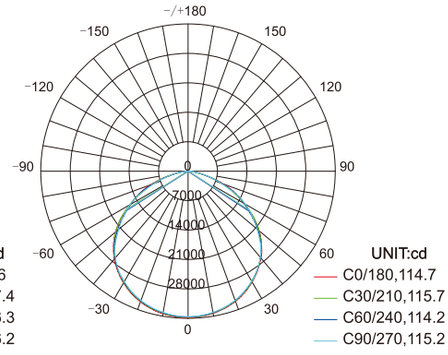

AVERAGE BEAM ANGLE(50%):114.9 DEG

Ordering Guide

SP	-	Mx	xxxW	U	X	S	Q	B	Z
1		2	3	4	5	6	7	8	9

1 Product Category
Sports Light

2 Product Series
M1/M2

3 Wattage
M1:400W/500W/600W/650W
M2:720W/800W/900W/1000W/1200W/1300W

4 Color Temperature
27=2700K,30=3000K,40=4000K,50=5000K,60=6000K,65=6500K,
RGB, RGBW

5 Dimming Function
D:Dimmable
N: Non-dimmable

6 Beam Angle
15=15°, 20 =20°,30=30°,40=40°,60=60°,120=120°

7 Sensor
Q can be N, represents without sensor

8 Remote Driver Box
B can be:
G: with remote driver box, Blank: without remote driver box

9 Input Voltage
Z can be:
A: 120-277VAC, E: 277-480VAC, F: 200-480VAC