# HAZARDOUS LOCATIONS LED LUMINAIRE
# **EX-B Spec Sheet**

Pan American
Professional Lighting Manufacturer




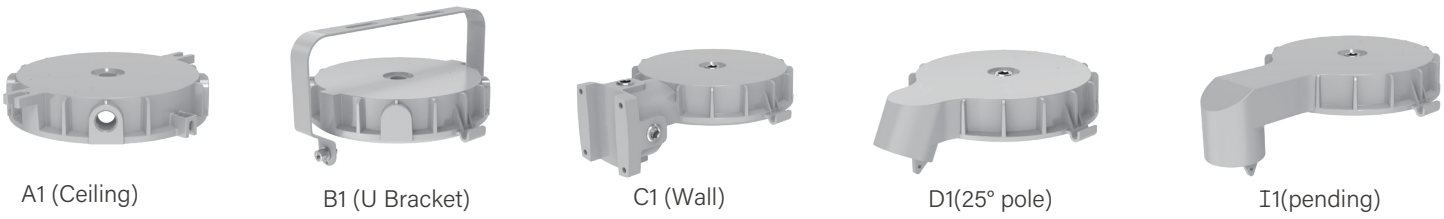

A1 (Ceiling) B1 (U Bracket) C1 (Wall) D1(25° pole) I1(pending)

## EX-B Spec Sheet

The B2/B5/BX/B4 Series LED luminaire is the ideal choice for hazardous applications. They can be used in locations wheremo-isture, dirt, dust, corrosion and vibration may be present, or areas where wind, water, snow or high ambient can be expected. Featuring various shapes of driver box cover, this series is designed to meet different requirements of installations.

## Compliance

- UL 844 Hazardous Locations Class
  Class I Division 2, Groups A, B, C and D
  Class II Division 1, Groups E, F and G
  Class II Division 2, Groups F and G
  Class III
- UL 1598 Wet Locations
- UL 1598A Marine Outside Type
- DNV
- ABS
- Vibration 3G
- NEMA Type 4X
- IP66
- IK08 (without wire guard)
- IK10 (with wire guard)

## Application

- Power Plants
- Heavy Industrials Storage Facility
- Paper mills
- Wastewater Treatment Plants
- Loading Docks Platforms
- Offshore Environments
- Chemical Processing Facility
- Petrochemical Processing Facility
- Metallurgical industry
- Food and Alcohol industry

# HAZARDOUS LOCATIONS LED LUMINAIRE
# **EX-B Spec Sheet**

Pan American
Professional Lighting Manufacturer

## Benefits & Features

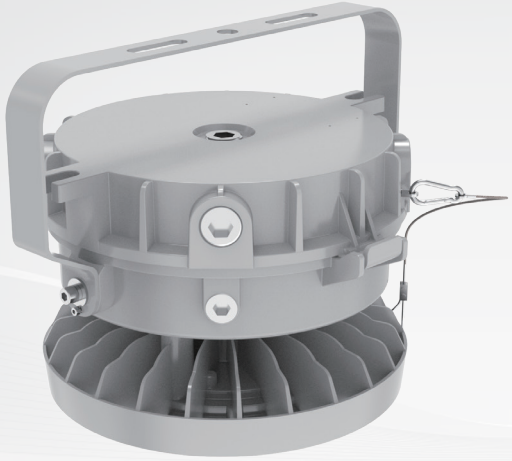

- Emergency function is optional
- Compact and rugged structure, easy for installation
- Various kinds of driver box cover available, designed for different installation requirements
- Shock and vibration resistance with IK08/IK10 certified
- High luminous efficacy - Up to 165 lumens per watt
- Aluminum housing, great corrosion resistance and cooling performance

## Key Features and Information

• Electrical

| Model | EX-xxxW B2 | EX-xxxW B5 | EX-xxxW BX | EX-xxxW B4 |
|---|---|---|---|---|
| Selectable Power | 40W/60W/80W | 60W/80W/100W | 120W/150W/200W | 200W/250W/300W |
| NO-Selectable Power | / | | | 350W/400W/500W/550W |
| Power Model | B2: FD-100T-054D for 120-347VAC; VA-100V-054B for 277-480VAC;<br>B5: SS-100VA-56BHL for 120-277VAC; VA-100V-054B for 277-480VAC;<br>BX: XLG-240-H-ABL for 120-277VAC; ESM-240S670MG for 277-480VAC;<br>B4: ELGC-300-H-AB/SS-500VP/SS-600VP-56BH for 120-277VAC;HVG-480-48AB/HVG-650-48AB for 277-480VAC | | | |
| Input Voltage | 120-277/347VAC or 277-480VAC | | | |
| Input Frequency | 50/60Hz | | | |
| Power Factor @120V | > 0.95 | | | |
| Optional Emergency Function | Min. 90 mins (Contact sales for EM options) | | | |
| Service Life | Up to 50,000 hours | | | |
| Salt Spray | 500Hours | | | |
| Dimming | Driver includes dimming control wiring for 1-10V dimming systems.<br>Requires separate 1-10V DC dimming circuit. | | | |



# HAZARDOUS LOCATIONS LED LUMINAIRE
# **EX-B Spec Sheet**

Pan American
Professional Lighting Manufacturer

## • Optical

| Model | EX-xxxW B2 | EX-xxxW B5 | EX-xxxW BX | EX-xxxW B4 |
|---|---|---|---|---|
| Selectable Power | 40W/60W/80W | 60W/80W/100W | 120W/150W/200W | 200W/250W/300W |
| Lumens Per Watt | 160lm/W | 160lm/W | 160lm/W | 165lm/W |
| Lumen Output | 6400–12800lm | 9600–16000lm | 19200–32000lm | 33000–49500lm |
| Selectable CCT | 4000K/5000K/6500K | | | |
| CRI | ＞70 | | | |
| Beam Angle | 120° | | | |
| LED | Long-life, high-efficacy, discrete, surface-mount 2835 LEDs<br>100,000-Hour LED lifespan based on IES LM-80 results and TM-21 | | | |

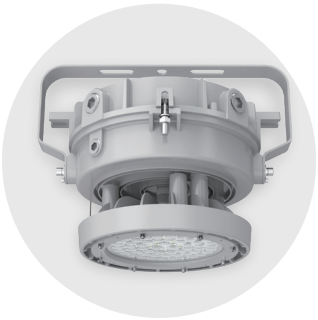

*(Note: Refer to the table of testing data on page 4-6.)*

## • Mechanical

| Model | EX-xxxW B2/B5/BX/B4 |
|---|---|
| Housing Material | Die-cast Aluminum |
| Diffuser type | Clear Flat Glass |
| Gasket Material | Silicone Rubber |
| Hardware | Stainless steel 304 |
| Protection Rating | Ingress protection: IP66 Impact protection: IK08; IK10 (with wire guard) |
| Mounting Options | Ceiling Mount (Included), U bracket Mount (Included), Pendant Mount / Trunnion Mount (Purchase separately) |
| Cable Entries | 3/4"NPT |
| Warranty | 5-year limited warranty for fixture ; 3-year limited warranty for battery backup |

## • Temperature Class

| Model | Input Voltage | Power Model | Temperature Class |
|---|---|---|---|
| B2 | 120-347VAC | FD-100T-054D | T4A: -40℃ to +55℃ (CIDII) |
| | 277-480VAC | VA-100V-054B | |
| B5 | 120-277VAC | SS-100VA-56BHL | T5:-40℃ to +60℃ (CIDII) |
| | 277-480VAC | VA-100V-054B | T5:-40℃ to +55℃ (CIDII) |
| BX | 120-277VAC | XLG-240-H-ABL | T4A:-40℃ to +50℃ (CIDII) |
| | 277-480VAC | ESM-240S670MG | |



Option 2: U bracket Mounting

# HAZARDOUS LOCATIONS LED LUMINAIRE
# **EX-B Spec Sheet**

Pan American
Professional Lighting Manufacturer

| Model | Input Voltage | Power Model | Temperature Class |
|---|---|---|---|
| B4 300W | 120-277VAC | ELGC-300-H-AB | T5: -40℃ to +55℃ (CIDII) |
| | 277-480VAC | HVG-480-48AB | |
| B4 350W | 120-277VAC | SS-500VP(Single Power) | T5: -40℃ to +55℃ (CIDII) |
| | 277-480VAC | HVG-480-48AB (Single Power) | |
| B4 400W | 120-277VAC | SS-600VP-56BH(Single Power) | T4A:-40℃ to +55℃ (CIDII) |
| | 277-480VAC | HVG-650-48AB (Single Power) | T4A: -40℃ to +50℃ (CIDII) |
| B4 500W | 120-277VAC | SS-600VP-56BH(Single Power) | T4A: -40℃ to +50℃ (CIDII) |
| | 277-480VAC | HVG-650-48AB(Single Power) | |
| B4 550W | 120-277VAC | SS-600VP-56BH(Single Power) | T4A: -40℃ to +40℃ (CIDII) |
| | 277-480VAC | HVG-650-48AB(Single Power) | |

- Electrical specification (actual measurement)

| Model | EX-80WB2D50D120PMT10T | | | | | | | | |
|---|---|---|---|---|---|---|---|---|---|
| Test Power | 80W | | | 60W | | | 40W | | |
| Test CCT (K) | 6500 | 5000 | 4000 | 6500 | 5000 | 4000 | 6500 | 5000 | 4000 |
| Lumens Per Watt (lm/W) | 158.25 | 165.66 | 158.47 | 160.64 | 166.97 | 161.88 | 161.71 | 166.16 | 162.91 |
| Lumen Output (lm) | 12391 | 12566 | 12295 | 9486.2 | 9675.2 | 9684.2 | 6530.6 | 6601.8 | 6588.3 |
| Beam Angle | 110 | 109.7 | 109.6 | 109.9 | 109.7 | 109.5 | 109.9 | 109.7 | 109.4 |
| CCT (K) | 6257 | 4994 | 4082 | 6199 | 4986 | 4078 | 6175 | 4986 | 4071 |
| CRI | 72.9 | 73.7 | 73 | 73 | 73.6 | 73 | 73.1 | 73.7 | 73.1 |
| Power Factor | 0.9979 | 0.9982 | 0.9982 | 0.9972 | 0.997 | 0.9972 | 0.9935 | 0.9933 | 0.9934 |
| Test Voltage | 120VAC | | | | | | | | |
| Test Power Model | FD-100T-054D | | | | | | | | |

# HAZARDOUS LOCATIONS LED LUMINAIRE
# **EX-B Spec Sheet**

Pan American
Professional Lighting Manufacturer

| Model | EX-100WB5D50D120V10T | | | | | | | | |
|---|---|---|---|---|---|---|---|---|---|
| Test Power | 100W | | | 80W | | | 60W | | |
| Test CCT (K) | 6500 | 5000 | 4000 | 6500 | 5000 | 4000 | 6500 | 5000 | 4000 |
| Lumens Per Watt (lm/W) | 157.28 | 167.26 | 158.06 | 161.82 | 170.13 | 161.68 | 164.67 | 171.24 | 165.22 |
| Lumen Output (lm) | 16036 | 16518 | 16157 | 13056 | 13352 | 13038 | 9954.7 | 10120 | 9992.8 |
| Beam Angle | 109.6 | 109.4 | 109.1 | 109.7 | 109.4 | 109.2 | 109.5 | 109.2 | 109 |
| CCT (K) | 6273 | 4972 | 4068 | 6263 | 4974 | 4068 | 6243 | 4969 | 4062 |
| CRI | 73.2 | 73.9 | 73.3 | 73.3 | 74 | 73.3 | 73.4 | 74 | 73.4 |
| Power Factor | 0.9977 | 0.9976 | 0.9977 | 0.9965 | 0.9962 | 0.9964 | 0.994 | 0.9937 | 0.994 |
| Test Voltage | 120VAC | | | | | | | | |
| Test Power Model | SS-100VA-56BHL | | | | | | | | |

| Model | EX-200WBXD50D120X24T | | | | | | | | |
|---|---|---|---|---|---|---|---|---|---|
| Test Power | 200W | | | 150W | | | 120W | | |
| Test CCT (K) | 6500 | 5000 | 4000 | 6500 | 5000 | 4000 | 6500 | 5000 | 4000 |
| Lumens Per Watt (lm/W) | 159 | 167.36 | 158.17 | 162.87 | 169.27 | 162.38 | 164.55 | 170.16 | 164.31 |
| Lumen Output (lm) | 31522 | 32126 | 31480 | 24966 | 25361 | 25002 | 20142 | 20449 | 20218 |
| Beam Angle | 108.5 | 108.2 | 107.8 | 108.6 | 108.2 | 107.9 | 108.8 | 108.3 | 107.9 |
| CCT (K) | 6260 | 5026 | 4100 | 6243 | 5028 | 4092 | 6214 | 5028 | 4089 |
| CRI | 73.3 | 73.6 | 73 | 73.4 | 73.6 | 73 | 73.2 | 73.7 | 73.1 |
| Power Factor | 0.9994 | 0.9993 | 0.9994 | 0.9982 | 0.998 | 0.9982 | 0.9965 | 0.9965 | 0.9965 |
| Test Voltage | 120VAC | | | | | | | | |
| Test Power Model | XLG-240-H-ABL | | | | | | | | |

# HAZARDOUS LOCATIONS LED LUMINAIRE
# **EX-B Spec Sheet**

Pan American
Professional Lighting Manufacturer

| Model | EX-300WB4D50D120EPG30T | | | | | | | | |
|---|---|---|---|---|---|---|---|---|---|
| Test Power | 300W | | | 250W | | | 200W | | |
| Test CCT (K) | 6500 | 5000 | 4000 | 6500 | 5000 | 4000 | 6500 | 5000 | 4000 |
| Lumens Per Watt (lm/W) | 172.69 | 178.88 | 170.86 | 175.66 | 181.09 | 174.18 | 179.44 | 183.52 | 178.16 |
| Lumen Output (lm) | 53106 | 53716 | 52732 | 44882 | 45221 | 44540 | 35291 | 35404 | 35089 |
| Beam Angle | 109.9 | 109.7 | 109.6 | 109.9 | 109.7 | 109.6 | 109.9 | 109.7 | 109.6 |
| CCT (K) | 6214 | 5003 | 4075 | 6189 | 5001 | 4073 | 6173 | 5003 | 4068 |
| CRI | 73.2 | 73.5 | 73 | 73 | 73.5 | 73.1 | 73.1 | 73.5 | 73.1 |
| Power Factor | 0.999 | 0.9988 | 0.998 | 0.9971 | 0.9968 | 0.998 | 0.9963 | 0.9959 | 0.9964 |
| Test Voltage | 120VAC | | | | | | | | |
| Test Power Model | ELGC-300-H-AB | | | | | | | | |

## Photometric

- 120 Degree

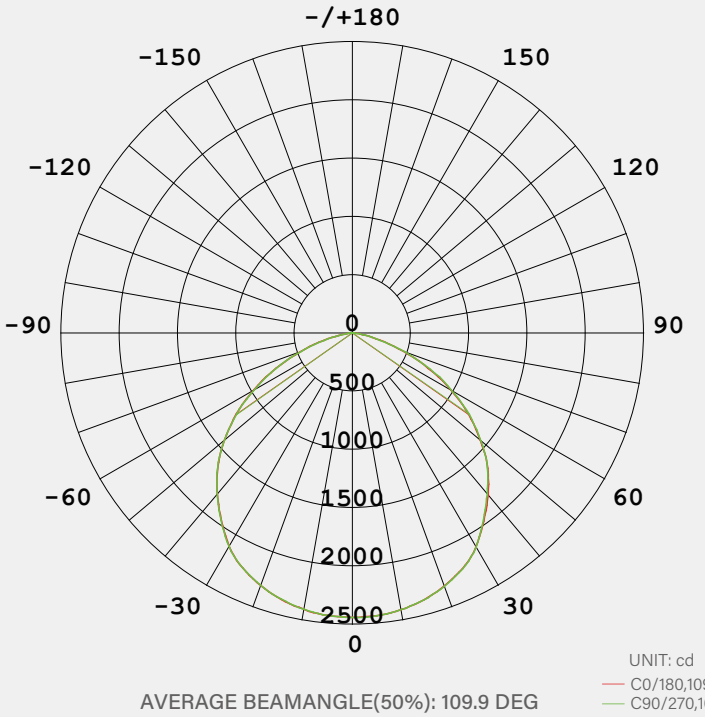


AVERAGE BEAMANGLE(50%): 109.9 DEG

# HAZARDOUS LOCATIONS LED LUMINAIRE
# **EX-B Spec Sheet**

Pan American
Professional Lighting Manufacturer

## Power and CCT Selectable

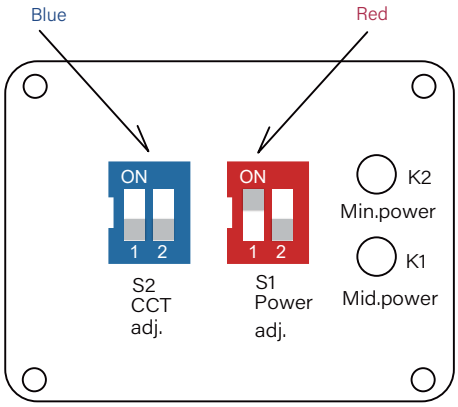


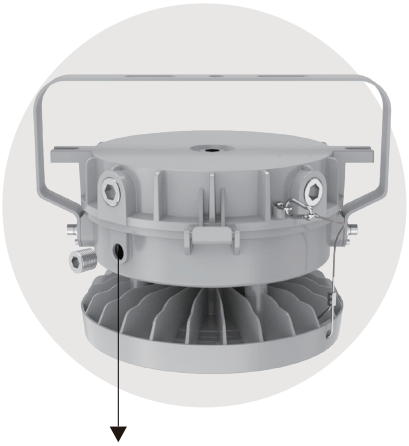

Power and CCT Selectable

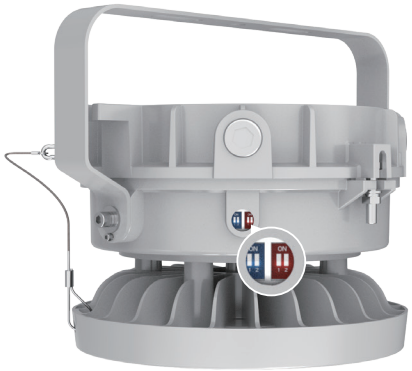

DIP switch

## Operating Instructions

- **S1 DIP switch - Red (S1 Power adj.)**

The luminaire incorporates a dual-dial power configuration switch enabling three selectable output ratings. Factory default settings and power levels can be customized based on project requirements.

1. Maximum Output (100% nominal power)
Switch configuration: Dial 1 = OFF, Dial 2 = OFF;




B5: 150W

2. Medium Output (70%-90% of nominal power, depending on specification)Switch configuration: Dial 1 = ON, Dial 2 = OFF




B5: 100W

3. Minimum Output (50%-70% of nominal power, depending on specification)Switch configuration: Dial 1 = OFF, Dial 2 = ON




B5:80W

- **S2 DIP switch - Blue (S2 CCT adj.)**

The luminaire incorporates a dual-dial power configuration switch enabling three preset color temperature options. The factory default setting can be customized according to order requirements.

1. Cool white, e.g. 6500K
Switch configuration: Dial 1 = OFF, Dial 2 = OFF




6500K

2. Neutral white, e.g. 5000K
Switch configuration: Dial 1 = ON, Dial 2 = OFF




5000K

3. Warm white, e.g. 4000K
Switch configuration: Dial 1 = ON, Dial 2 = ON




4000K

# HAZARDOUS LOCATIONS LED LUMINAIRE
# **EX-B Spec Sheet**

Pan American
Professional Lighting Manufacturer

## Product Dimensions Unit: mm[inch]

- B2

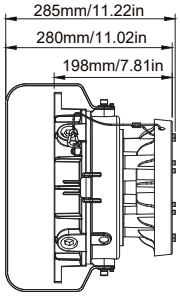


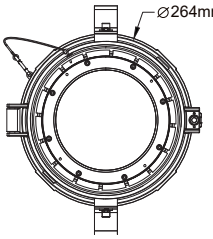


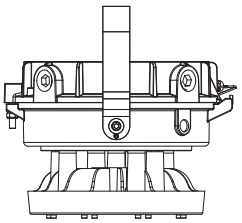

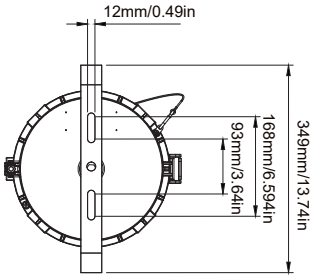


- B5

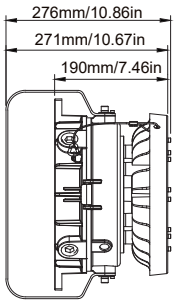


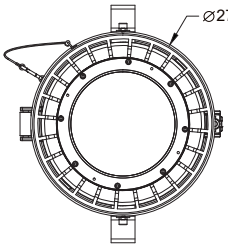


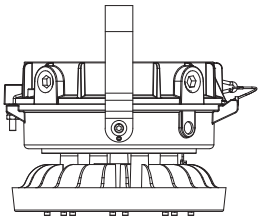

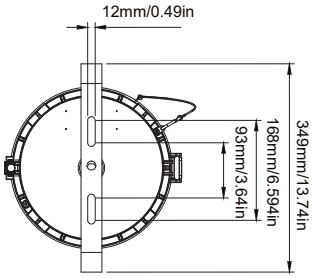


- BX

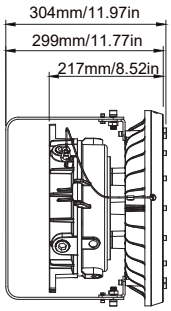


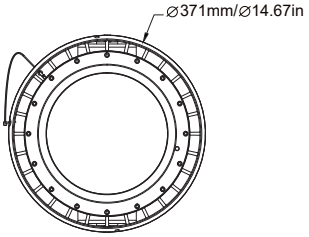


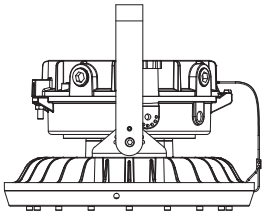

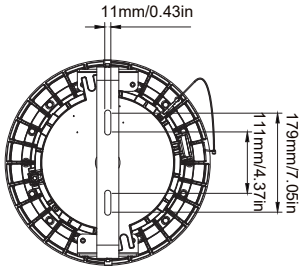


- B4

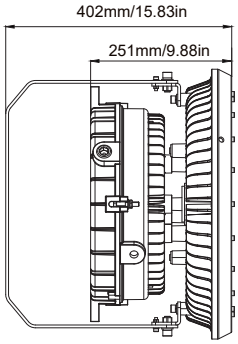


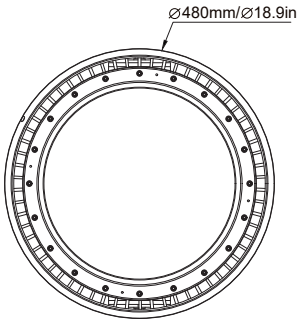


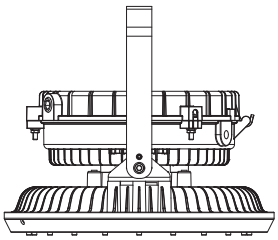

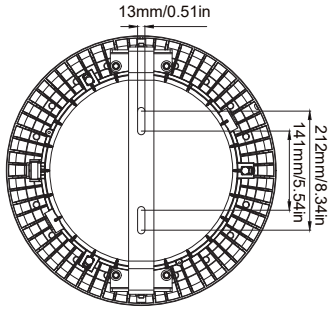

## Mounting Methods

- Option 1: Ceiling Mounting

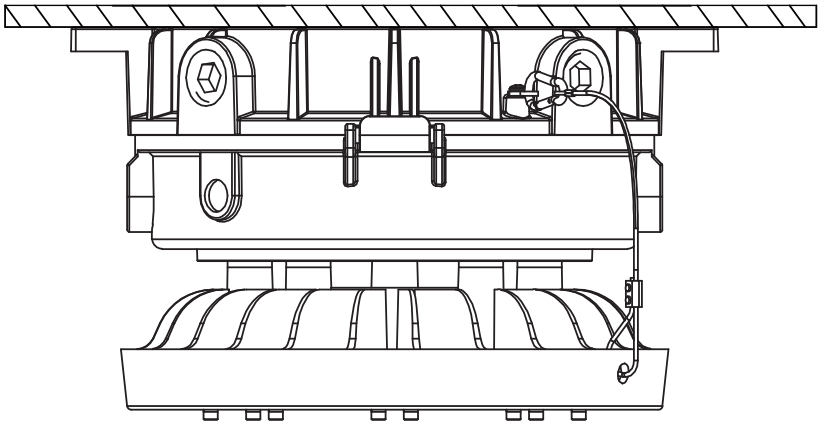

- Option 2: U bracket Mounting

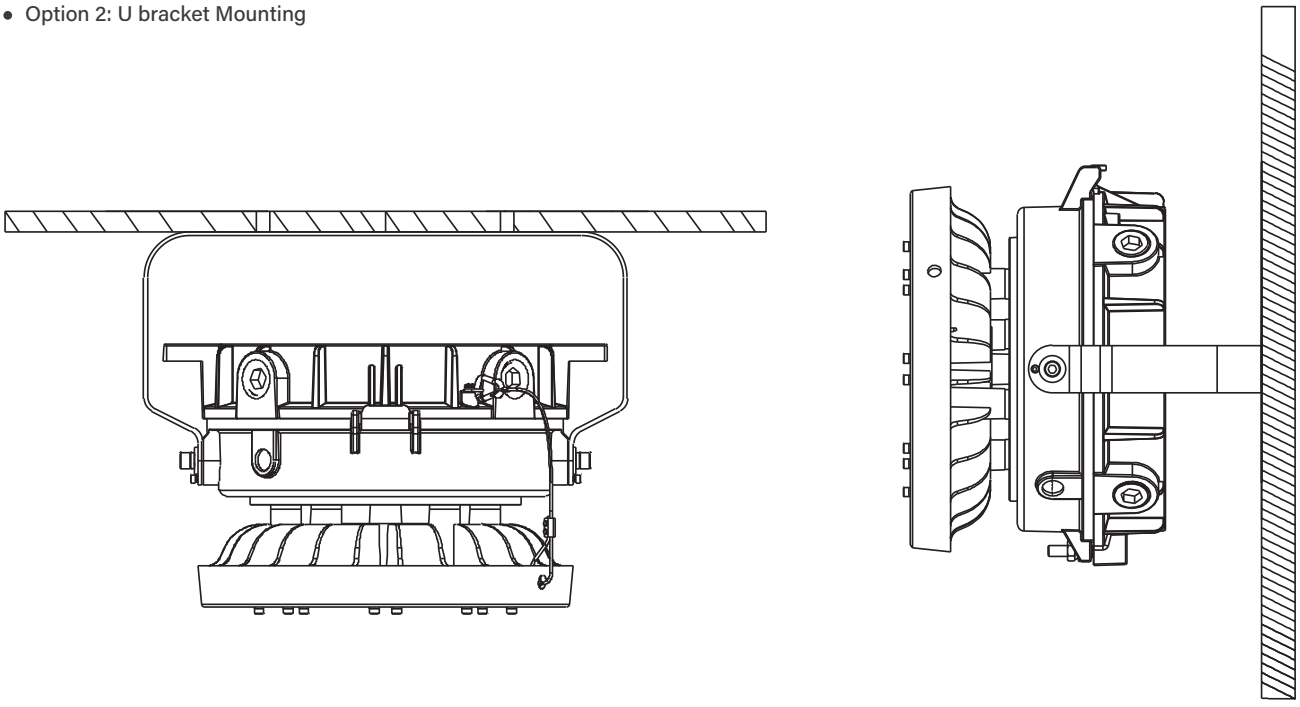

- Option 3: Pendant Mounting

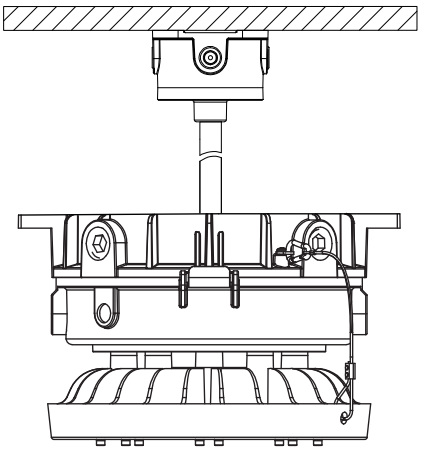

- Option 4: Trunnion Mounting

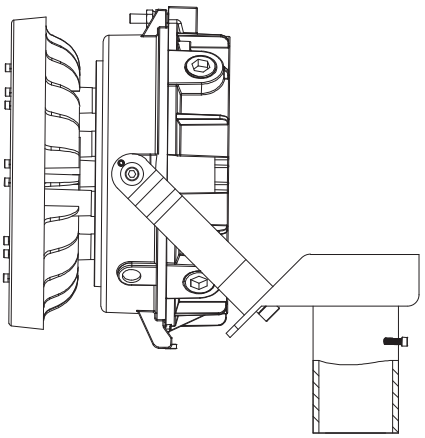

## Accessories



EX-Bended Pipe



EX-Straight Pipe



EX-HD51-KYD 90°



EX-HD51-KYD 25°



EX-Slip Fitter Kit



EX-90° Wall Mount Kit



EX-25° Wall Mount Kit



EX-90° Stanchion Mount Kit



EX-25° Stanchion Mount Kit



EX-Hook



EX-HD51-KB1

## Packing Information

| Model | Package Dimensions（LxWxH） | Net Weight | Gross Weight | Quantity/Carton |
|---|---|---|---|---|
| B2 | 450x450x300mm/17.72x17.72x11.81inch | 6.4kg/14.11 lb | 8 kg/17.65 lb | 1 pc |
| B5 | 450x450x300mm/17.72x17.72x11.81inch | 7.3 kg/16.09 lb | 8.9kg/19.63 lb | 1 pc |
| BX | 450x450x320mm/17.72x17.72x12.60inch | 11.4 kg/25.13 lb | 12.9 kg/28.46 lb | 1 pc |
| B4 | 575x575x356mm/22.64x22.64x14.02inch | 17.0 kg/37.48 lb | 23.5 kg/51.81 lb | 1 pc |

## Ordering Guide (B2/B4)

EX - xxW B2/B4 D 50 D40 P H A40 T -E

**Basic Model Series**
EX= for all luminaires

**Input wattage of luminaires**
Selectable:
B2:40W/60W/80W
B4:200W/250W/300W
NO-Selectable:
350W/400W/500W/550W

**Lamp Enclosure Heatsink type**
B2= Lamp Enclosure Heatsink (B2)
B4= Lamp Enclosure Heatsink (B4)

**Dimming**
D = Dimmable

**CCT**
Selectable:
50 = 4000K
5000K/6500K

**Degree**
120 = 120 degrees

**Heat Sink type**
P = Heat Sink P

**Input Voltage**
H = 200-480 V
M = 120-347 V
Blank = 100-277 /120-277 V

**LED Driver Group**
T10=FD-100T-054D
A10=VA-100V-054B
G30=ELGC-300-H-AB
VP500=SS-500VP
VP600=SS-600VP
H48=HVG-480-48AB
H65=HVG-650-48AB

**Dual Tunable or not**
Blank = Without Tunable
T = With Tunable

**Backup Power Source**
Can be:
Blank = No Backup Power
-E = Backup Power

# HAZARDOUS LOCATIONS LED LUMINAIRE
# **EX-B Spec Sheet**

Pan American
Professional Lighting Manufacturer

## Ordering Guide (B5/BX)

