★S1/S2

INSTALLATION INSTRUCTIONS

HAZARDOUS LOCATIONS LED LUMINAIRE (S SERIES)

Class I, Division 1,Groups B, C and D ;Class I, Division 2,Groups A, B, C and D ; Class II, Division 1, Groups E, F and G; Class II, Division 2, Groups F and G; Class III

WARNING

RISK OF FIRE, ELECTRIC SHOCK OR PERSONAL INJURY

Before installation, turn power off.

- Risk of fire or electric shock. Luminaire installation requires knowledge of luminaires and electrical systems. If not qualified, DO NOT try to install. Please contact an electrician.
- Risk of fire or electric shock. Suitable for wet locations. Please turn off the power before installation.
- Risk of fire or electric shock. Suitable for non-insulated surface and frame. DO NOT cover fixture with insulation liner or similar material.
- DO NOT install in unstable, loose or breakable surfaces.
- DO NOT let objects impact or exert force on the surface of the fixture.
- To Reduce The Risk Of Ignition Of Hazardous Atmospheres, Disconnect The Luminaire From The AC Supply Circuit And Determine That The Area Is Free Of Ignitable Concentration Before Opening. Keep Tightly Closed When In Operation
- To Prevent The Ignition of Explosive Atmospheres, Determine That the area is Not Hazardous Before Operating The Test Switch.

AVERTISSEMENT

RISQUE D'INCENDIE, DE CHOC ÉLECTRIQUE OU DE BLESSURE CORPORELLE

Avant l'installation, coupez l'alimentation électrique.

- Risque d'incendie ou de choc électrique. L'installation du luminaire requiert des connaissances en matière de luminaires et de systèmes électriques. Si vous n'êtes pas qualifié, NE TENTEZ PAS d'installer l'appareil. Veuillez contacter un électricien.
- Risque d'incendie ou de choc électrique. Convient aux emplacements humides. Veuillez couper l'alimentation avant l'installation.
- Risque d'incendie ou de choc électrique. Convient aux surfaces et cadres non isolés. NE RECOUVREZ PAS le luminaire d'un isolant ou d'un matériau similaire.
- NE PAS installer sur des surfaces instables, desserrées ou cassables.
- NE PAS laisser des objets heurter la surface du luminaire ni exercer de force sur celle-ci.
- Pour réduire le risque d'inflammation des atmosphères dangereuses, déconnectez le luminaire du circuit d'alimentation en courant alternatif (CA) et assurez-vous que la zone est exempte de concentration inflammable avant de l'ouvrir. Maintenez-le hermétiquement fermé pendant son fonctionnement.
- Pour prévenir l'inflammation des atmosphères explosives, assurez-vous que la zone n'est pas dangereuse avant d'actionner l'interrupteur de test.

INSTALLATION & MAINTENANCE

1

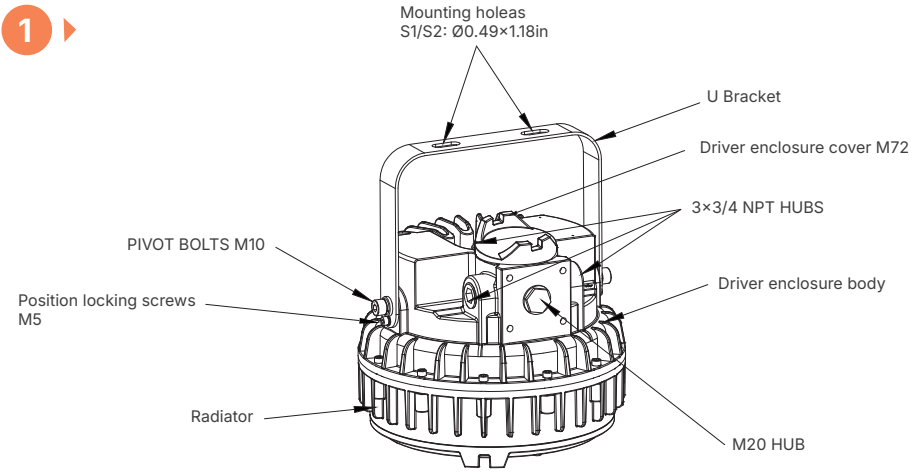

»» Option: Wire Guard

2

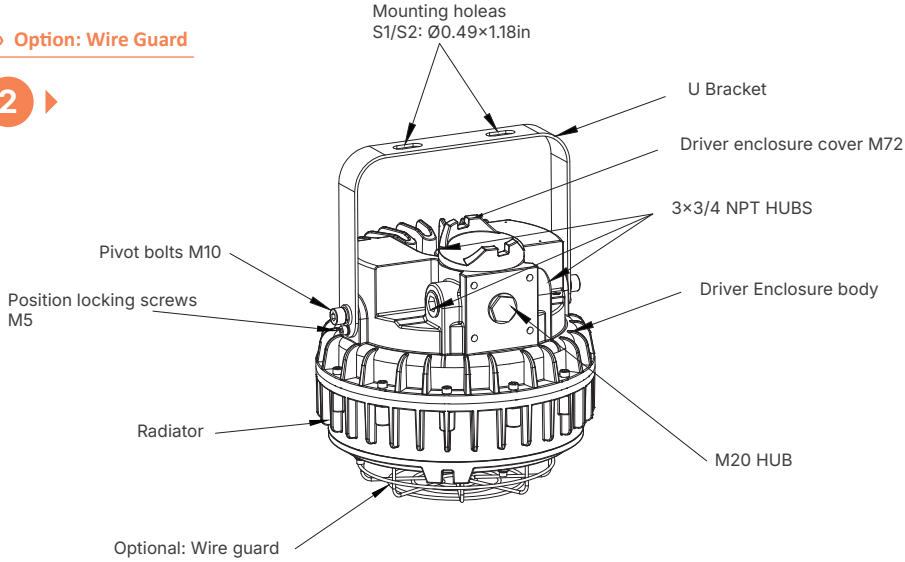

1. Although no routine maintenance is required to keep this luminaire functional, it should be checked periodically ensure it is working properly, and to look for any external damage.
2. For optimum performance, keep the light transmission portion of the luminaire clean.

DIMENSIONAL DATA(Unit: inch)

»» Side view

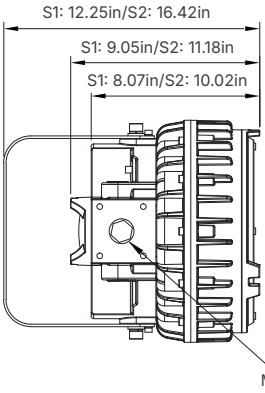

»» Front view

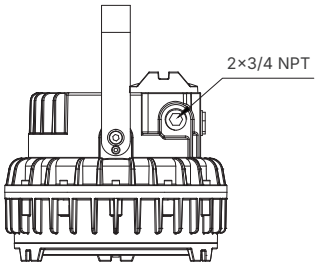

»» Top view

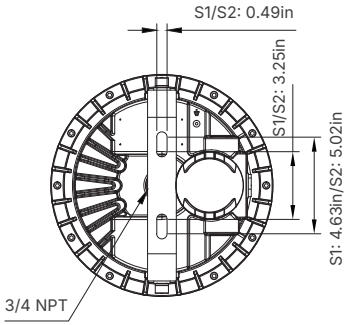

TYPICAL INSTALLATION & MOUNTING INSTRUCTIONS

A Ceiling Mounting

Fig 1

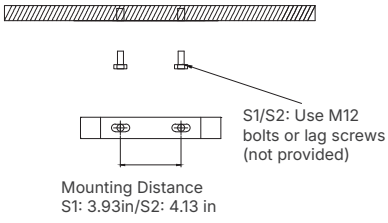

Fig 2

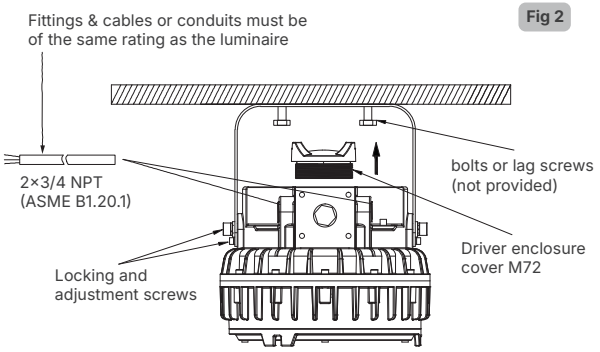

1. Drill two holes in the ceiling.
2. Take the luminaire out of the package, and tighten the 2 M5 bracket positioning screws (2Nm);
3. Align the luminaire with the pre-drilled holes, then insert and tighten the bolts or lag screws (not provided).
4. Open the driver enclosure cover, and properly connect the wires and conduits.

Fig 3

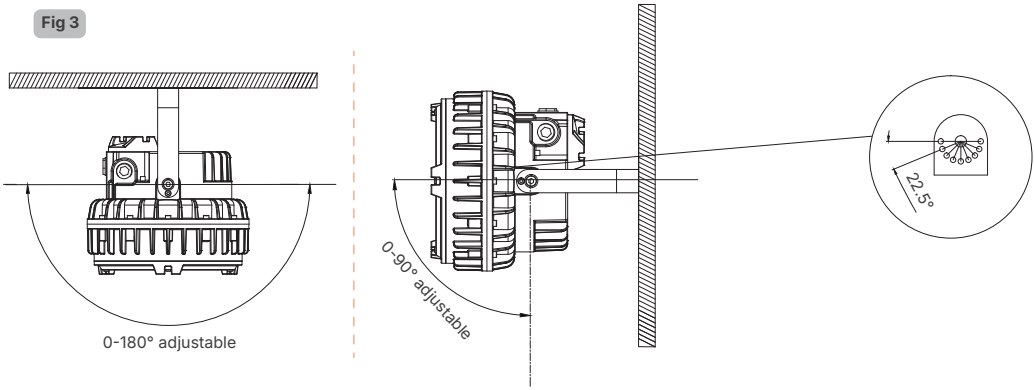

B Pendant Mounting

Fig 1

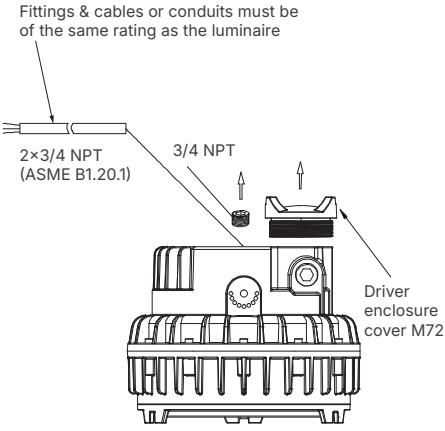

Fig 2

Note: It is recommended to fit a Anti-Fall Safety Chain for this product, which shall be provided by the customer.

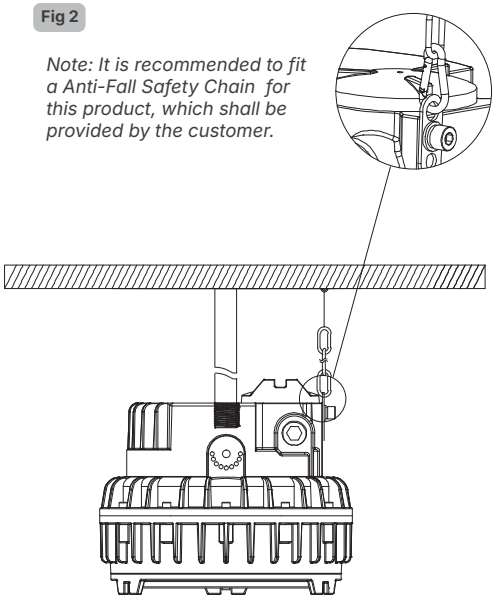

1. Remove the 3/4 NPT fitting on the top cover, and open the driver enclosure cover.
2. Screw the pin into the tool to adjust it to 3/4" NPT thread specification.
3. Fasten one end of the Anti-Fall Safety Chain to the hole on the side of the luminaire body, at a position that can withstand 100kg of force, such as a steel frame, wall, etc.; fix the other end to a load-bearing structure that can support the full weight of the luminaire.
4. Properly connect the wires and conduits.

C Pole Mounting

Fig 1

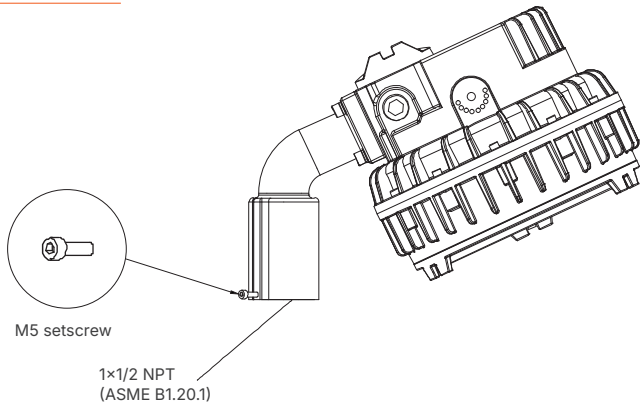

Fig 2

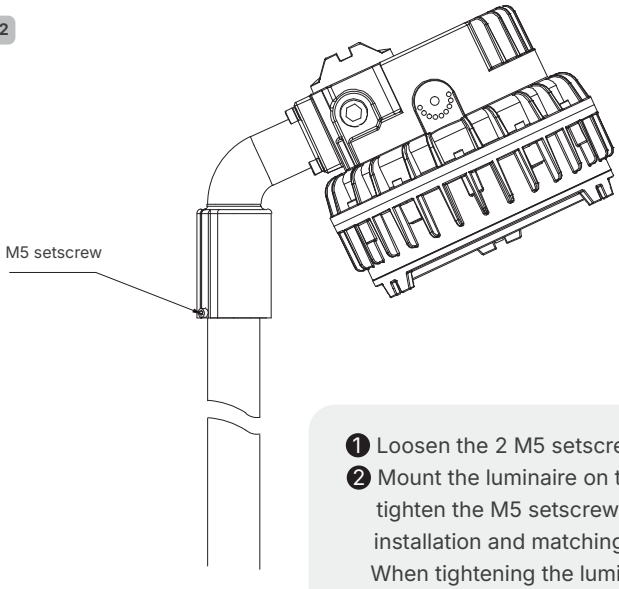

1. Loosen the 2 M5 setscrews.
2. Mount the luminaire on the fixed lamp pole, then fully tighten the M5 setscrews.Pay attention to the thread installation and matching of the lamp pole (1×1/2 NPT). When tightening the luminaire, make sure there are 3 full engaged threads.
3. Properly connect the wires and conduits.

MAGNETICALLY CONTROLLED SWITCH

>> The label stuck on the surface of the lamp body to identify the position of the Magnetic switch.
>> The area indicated by the circle has the strongest magnetism.

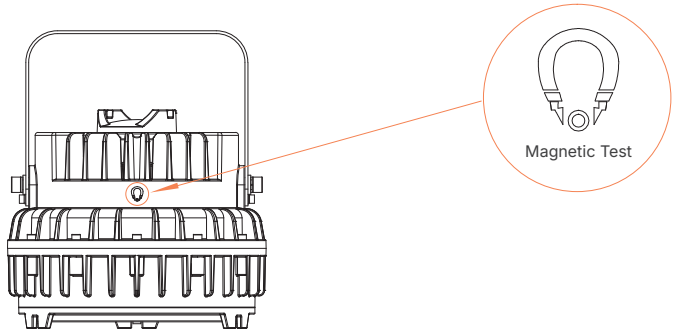

1. The Magnetically Controlled Test Switch is designed to test emergency function. When testing is not required, the magnet is adsorbed on the fixed position.
2. A label stuck on the surface of the lamp body identifies the position of the Magnetic switch.

Function	Operation
Emergency Function Test	In AC mains mode, when the magnet approaches/leaves magnetic switch position, the product will change between AC mains mode and emergency mode. When the magnet is close to the magnetic switch position, the product will enter emergency mode from mains mode. When the magnet leaves the magnetic switch position, the product will return to AC mains mode from emergency mode.
Turn off Emergency Output	Disconnect the AC mains power and operate the product in emergency mode three times with the magnet close to and away from the magnetic switch position: exit emergency mode and turn off emergency output.
Monthly Test	In AC mains mode with full charge, manually enter the monthly test time—magnet approaches and leaves the magnetic switch position 5 times. When entering the monthly test mode, the green indicator flashes at a frequency of 0.5 seconds per time for 5 times. After entering the monthly test mode, the green indicator flashes at a frequency of 1 second per time. The monthly test mode lasts for 30 seconds to check whether the emergency function is normal.
Annual Test	In AC mains mode with full charge, manually enter the annual test mode—magnet approaches and leaves the magnetic switch position 7 times. When entering the annual test mode, the green indicator flashes at a frequency of 0.5 seconds per time for 7 times. After entering the annual test mode, the green indicator flashes at a frequency of 1 second per time. The annual test mode lasts for 90 minutes to check whether the emergency discharge duration meets the standard (US version 90 Min).

NOTE:

(1) The magnet should be moved horizontally (the function will not work if the magnet is moved vertically).

(2) When the magnet leaves the magnetic switch position, the distance should be kept more than 10 centimeters. Meanwhile maintain a fast speed with a 1-second interval between each movement.

INDICATOR LIGHT

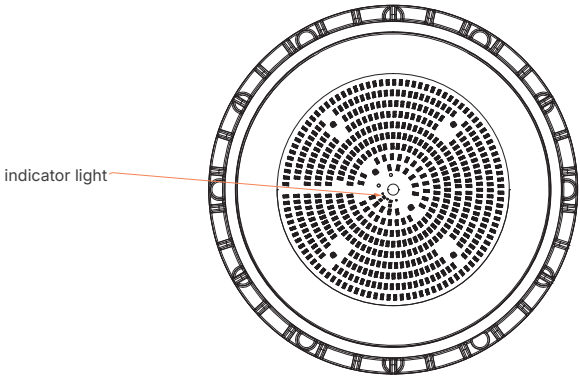

Operate Mode / LED Features		Yellow LED(fault indicator LED)	Green LED(indicate LED)
Charge Mode	Charging	/	Flash 0.2Hz (5S/time)
	Fully charged	/	ON
Discharge Mode	Discharge	/	Flash 1Hz(1S/time)
	Discharge cut-off	/	OFF
Battery disconnect		Flash 2Hz (0.5S/time)	/
LED Lamp disconnect		Flash 2Hz (0.5S/time)	/
Battery under voltage		Flash 1Hz (1S/time)	/
Battery over voltage		Flash 1Hz (1S/time)	/
Function test beginning (Monthly Test)		/	Flash 2Hz (0.5S/time), flash 5 times
Under function test		/	Flash 1Hz (1S/time)
Function test failed		Flash 0.5Hz (2S/time)	/
Discharge duration test beginning (Annual Test)		/	Flash 2Hz (0.5S/time), flash 7 times
Under discharge duration test		/	Flash 1Hz (1S/time)
Discharge duration test failed		Flash 0.5Hz (2S/time)	/

POWER AND CCT SELECTABLE

(This section applies only to the dual-adjustable series)-Use Model S2 as an example

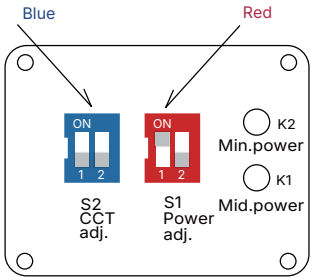

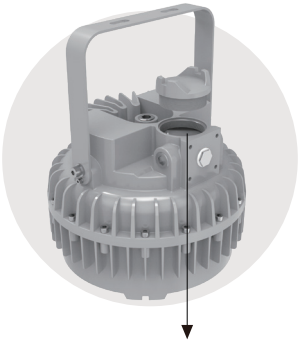

Power and CCT Selectable



DIP switch

»» Operating Instructions

S1 DIP switch - Red (S1 Power adj.)

The luminaire incorporates a dual-dial power configuration switch enabling three selectable output ratings. Factory default settings and power levels can be customized based on project requirements.

1- Maximum Output (100% nominal power)
Switch configuration: Dial 1 = OFF, Dial 2 = OFF



S2:200W

2- Medium Output (70%-90% of nominal power, depending on specification)
Switch configuration: Dial 1 = ON, Dial 2 = OFF



S2:150W

3- Minimum Output (50%-70% of nominal power, depending on specification)
Switch configuration: Dial 1 = OFF, Dial 2 = ON



S2:100W

S2 DIP switch - Blue (S2 CCT adj.)

The luminaire incorporates a dual-dial power configuration switch enabling three preset color temperature options. The factory defaultsetting can be customized according to order requirements.

1- Cool white, e.g. 6500K
Switch configuration: Dial 1 = OFF, Dial 2 = OFF



6500K

2- Neutral white, e.g. 5000K
Switch configuration: Dial 1 = ON, Dial 2 = OFF



5000K

3- Warm white, e.g. 4000K
Switch configuration: Dial 1 = ON, Dial 2 = ON



4000K

WIRING DIAGRAM

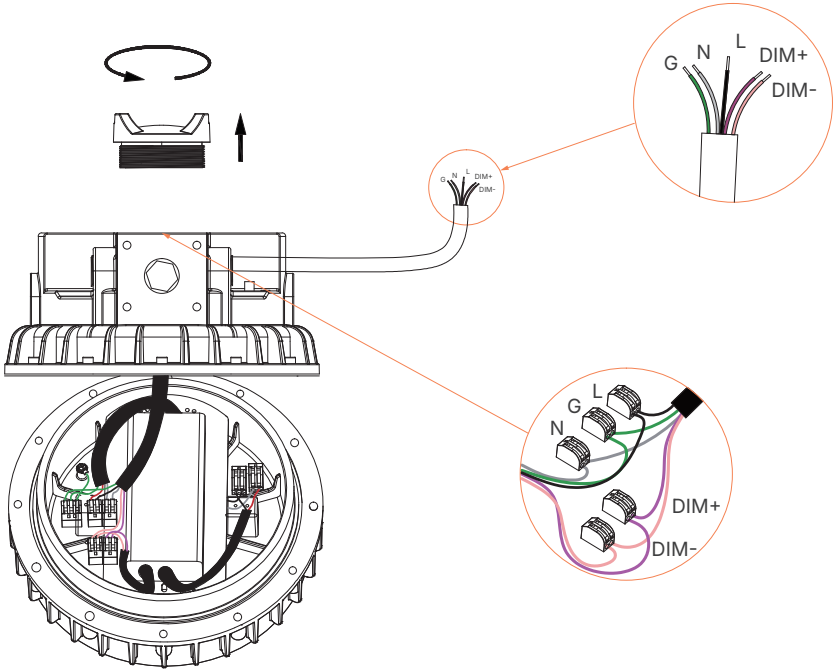

CIRCUIT DIAGRAM

LNG(PE) L1 LNG(PE) Terminal: Nominal cross-sectional area 2.5 mm² (max. port size: 4 mm²)

»» Conventional Circuit Diagram

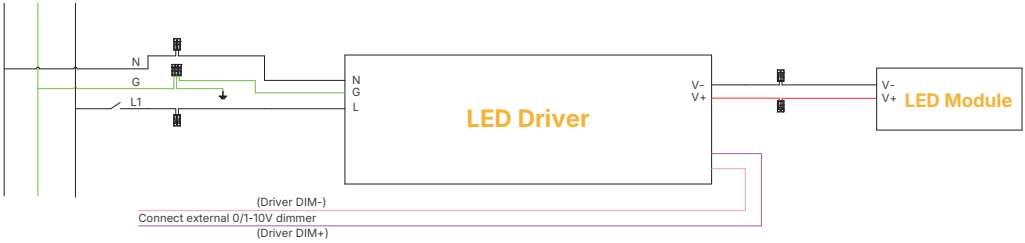

»» Emergency Circuit Diagram

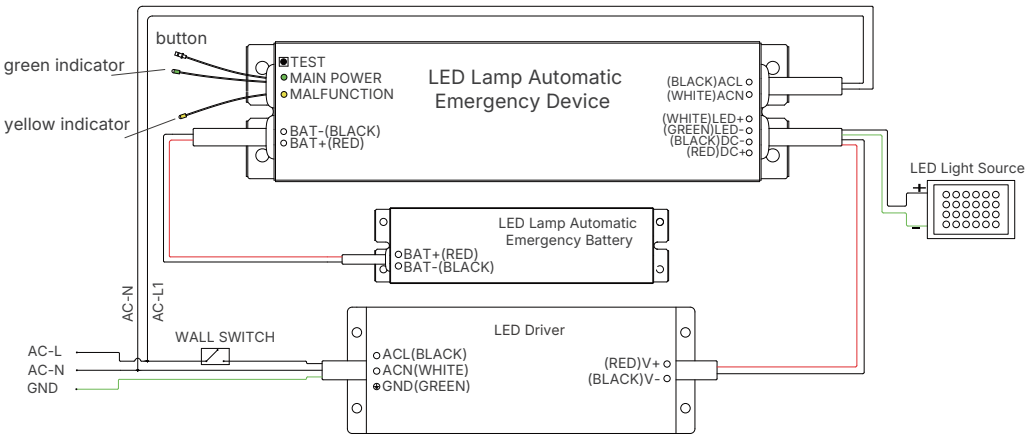

»» Power and CCT Selectable Circuit Diagram

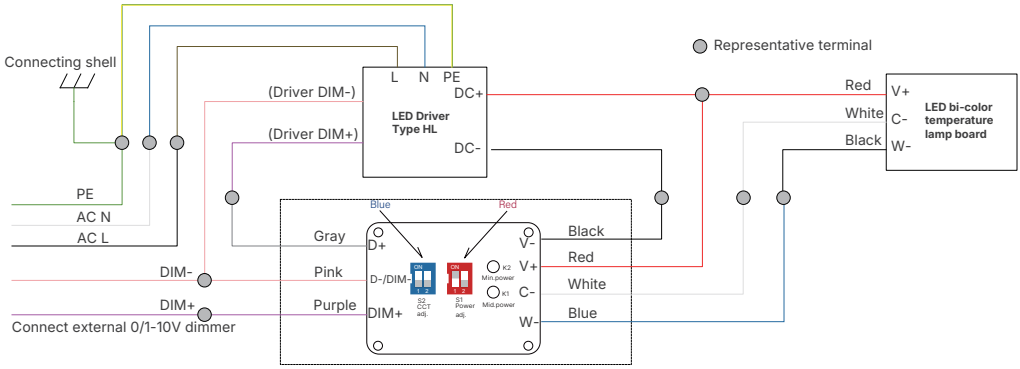

EMERGENCY DEVICE & BATTERY

(Emergency circuit diagram is currently only used for S2)



Driver Model	EM-15W-HL-X1(for S2)	EM-15W-HL-XX1 / EM-15W-HL-XX1-0(for S2)	
Rated Input Voltage	120-347VAC, 50/60 Hz	120-347VAC, 50/60 Hz	
Input Current	100mA max	100mA max	
Input Power	9W max	9W max	
Output Voltage	25-55VDC	32-55VDC	
Emergency Wattage	8W max (constant Current)	8W max (constant Current)	15W max (constant Current)
Emergency Period	90 minutes	180 minutes	90 minutes
Output Current	200mA	200mA	320mA
Response Time	<550mS	<550mS	
Charge Time	≤24 hours	≤24 hours	
Battery Material	IFR18650 LiFePO4	IFR18650 LiFePO4	
Battery Capacity	12.8V, 1600mAh	25.6V, 1600mAh	
Ambient Temperature	0°C to 65°C	0°C to 65°C	

NOTE:

(1) Although certified at Max Wattage, the emergency output power is reduced by lowering the current to meet the 180-minute runtime requirement.